DWG.NO.					
	MARK	DATE	REVISION	REASON	SIGNATURE

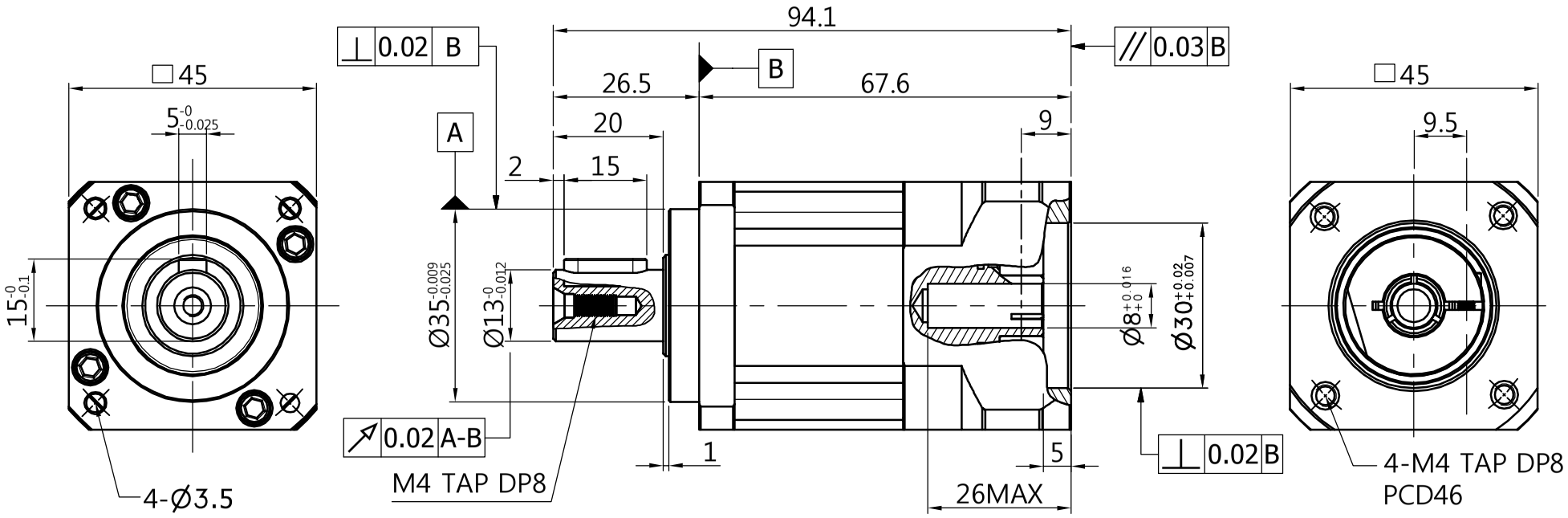

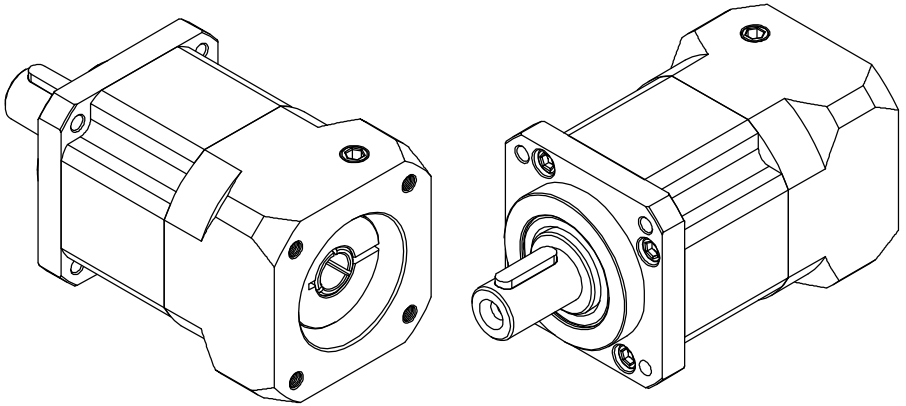

1. MODEL : BPL044-1단
2. Reducer specification

Ratio	Backlash Max (arc-min)	Out Torque(N.m)		Rate input speed Max. (r.p.m)	Peak input speed Max. (r.p.m)	Force (Kgf)		Weight (kg)
		Rate	Peak			Radial	Thrust	
3~10	8			4,400	5,000	700	360	

3. Application of Motor

Output Capacity(W)	Maker	Model	Rate torque (N.m)	Peak torque (N.m)

NO.	DESCRIPTIONS	SIZE	MAT'L	Q'TY	WEIGHT (kgf)	REMARKS
	ASS'Y			1		

CUSTOMER	STANDARD		SCALE	N/S	PROJECTION
TITLE	BP044-1단		DWG.NO.		REV. NO. 0
			REF.NO.		
DRAWN	CHECKED	APPROVED			
S.K Chung			Brato Motion & Control	브라토(주) BRATO DRIVES	