4, 5 Port Solenoid Valve
Rubber Seal
Series SYJ3000/5000/7000

Low power consumption: 0.5W(Without light)
(Current draw: 21mA at 24V DC)

Bright colour tone and state of the art design

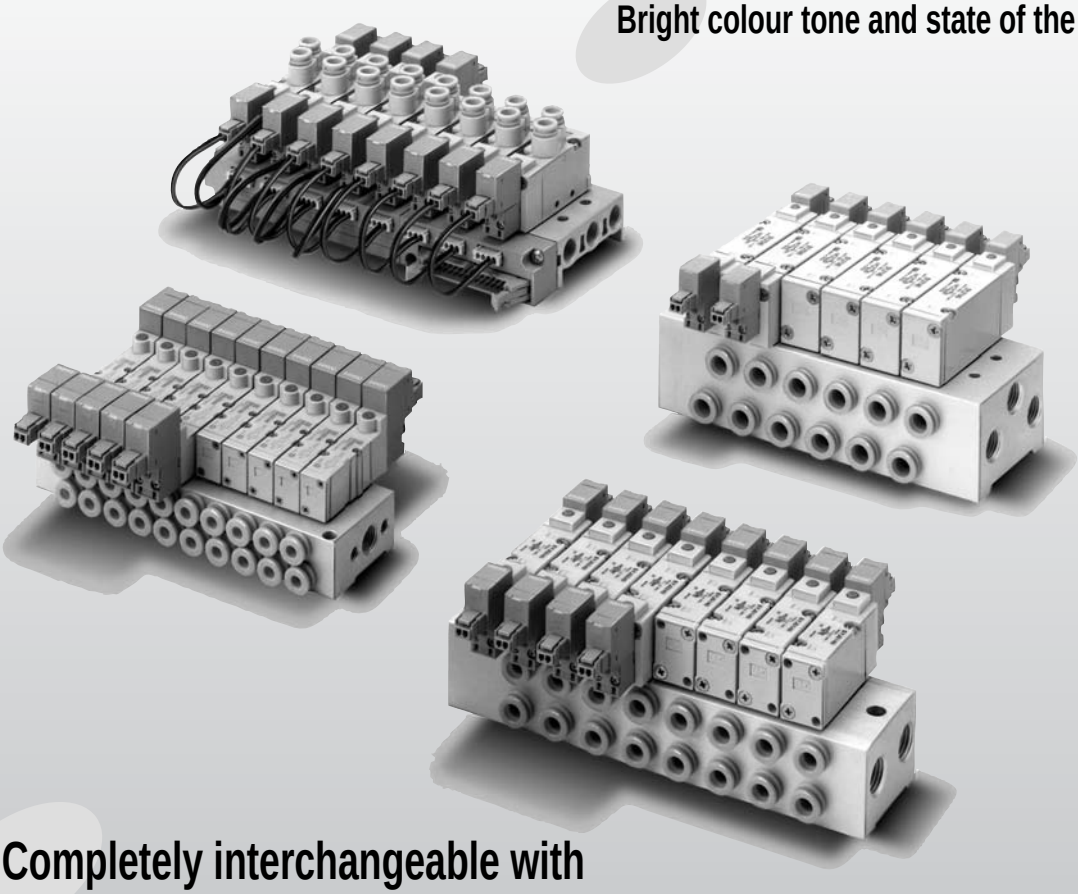

Completely interchangeable with the previous series VJ3000/5000/7000 and VZ3000/5000
Mounts on the same sub-plates and manifolds as the VJ3000/5000/7000 and the VZ3000/5000.

	Series VJ	Series VZ
SYJ3000	VJ3000	—
SYJ5000	VJ5000	VZ3000
SYJ7000	VJ7000	VZ5000

Choice of pilot exhaust styles

Standard valve suitable for copper free applications

4, 5 Port Solenoid Valve
Rubber Seal
Series SYJ3000/5000/7000

Variations

Series		Port size Effective area mm²(Nℓ/min)	Actuation	Voltage	Electric entry	Option: Light and surge voltage suppressor	Manual override
Body ported	**SYJ3000**	M3 : 0.9(49.08)	**2 position** ●Single ●Double **3 position** ●Closed centre ●Exhaust centre ●Pressure centre	**DC** ■ 24V DC 12V DC 6V DC 5V DC 3V DC	Grommet 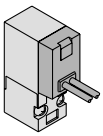 L plug connector 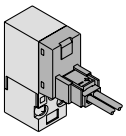 M plug connector 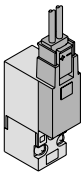	**DC** ■ With surge voltage suppressor ■ With light and surge voltage suppressor	■ Non-locking push style ■ Push-turn-locking slotted style
	SYJ5000	M5 X 0.8: 3.6(196.30) C4 : 3(166.86) C6 : 3.4(169.39)					
	SYJ7000	1/8: 11(588.90) C6: 8.6(471.12) C8: 9.9(539.83)					
Base mounted	**SYJ3000**	M5 : 1.8(98.15)					
	SYJ5000	1/8: 4.5(245.38)					
	SYJ7000	1/8, 1/4: 12.6(687.05)					

Manifold Variations

Valve series		A, B port location	A, B port size: M3	M5	1/8	With built-in One-touch fitting, Applicable tube O.D.: ø4	ø6	ø8	Manifold options: Individual SUP spacer ass'y	Individual EXH spacer ass'y	Interface regulator	Flat cable manifold
Body ported	SYJ3000	Top	●	—	—	—	—	—	—	—	—	●
Body ported	SYJ5000	Top	—	●	—	●	●	—	●	●	—	●
Body ported	SYJ7000	Top	—	—	●	—	●	●	—	●	—	●
Base mounted	SYJ3000	Side	●	●	—	●	—	—	—	—	—	●
Base mounted	SYJ3000	Bottom	—	—	—	—	—	—				—
Base mounted	SYJ5000	Side	—	●	—	●	●	—	●	●	● (P port regulation)	●
Base mounted	SYJ5000	Bottom	—	●	—	—	—	—				—
Base mounted	SYJ7000	Side	—	—	●	—	●	●	●	●	● (P port regulation)	—
Base mounted	SYJ7000	Bottom	—	—	●	—	—	—				—

Body ported

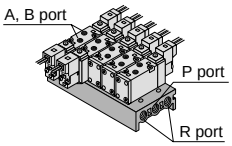

Base mounted

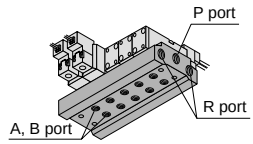

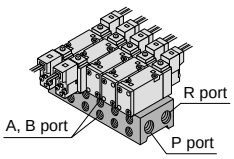

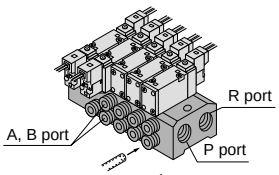

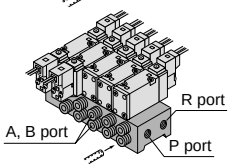

Individual SUP spacer ass'y

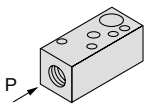

Individual EXH spacer ass'y

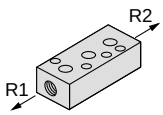

Interface regulator

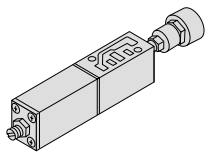

21P Type

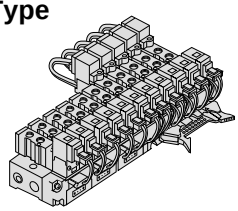

32P Type

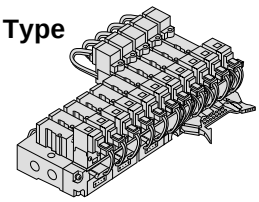

Mixed mounting of 3 port valves and 4, 5 port valves

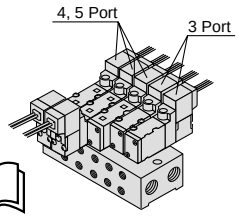

· Refer to p.1.3-21 for SYJ3000, p.1.3-44 for SYJ5000 and p.1.3-65 for SYJ7000.

⚠Precautions

Be sure to read before handling. Refer to p.0-33 to 0-36 for Safety Instructions and common precautions.

⚠Warning

Operation of Manual Override

Use caution since manual override operation will operate any connected actuators.

■Non-locking push style[Standard]

Press in the direction of arrow.

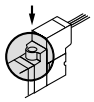

■Push-turn-locking slotted style[D]

While pressing, turn in the direction of the arrow.
If you do not turn, the mechanism does not lock.

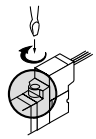

Locked position

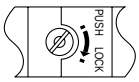

Note) A second manual override is located on the pilot valve assembly. It is only available as a non-locking push style. Simply depress in the direction of the arrow.

⚠Caution

Common Exhaust Port for the Pilot and Main Valve

Pilot air is exhausted through the main valve body rather than directly to atmosphere.

- ●Suitable for applications where exhausting the pilot valve to atmosphere would be detrimental to the surrounding working environment.
- ●For use in extremely dirty environments where there is the possibility that dust could enter the pilot exhaust and damage the valve.

Ensure that the piping of exhaust air is not too restrictive.

⚠Caution

Series SYJ3000/5000/7000 and Series SYJ300/500/700 can be mounted on the same manifold.

How to mount on the same manifold is shown on the following pages.

SYJ3000, SYJ300·····P.1.3-21
SYJ5000, SYJ500·····P.1.3-44
SYJ7000, SYJ700·····P.1.3-65

In case that 4 or 5 port valve is used as 3 port valve Series SYJ 3000, 5000, 7000 may be used as a N.C.or N.O. 3 port valve by plugging one of the A,B ports.
Be sure not to plug the exhaust ports. Can be used when a double solenoid, 3 port valve is required.

Plug position		B port	A port
Configuration		N.C.	N.O.
Number of solenoids	Single	Plug 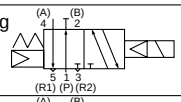	Plug 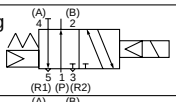
	Double	Plug 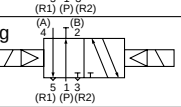	Plug 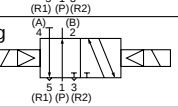

(JIS Symbols above: Series SYJ5000)

⚠Caution

How to Use Plug Connector

①Connection/Discconnection of connector

●Connection

Push the connentor straight onto the pins of the solenoid, making sure the lip of the lever securely "locks" into the groove of the solenoid cover.

●Disconnection

Press the lever against the connector housing and pull it outward from the solenoid.

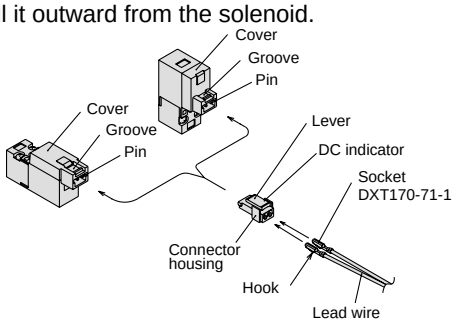

②Crimping connection of lead wire and socket

Strip 3.2 to 3.7mm of the lead wire ends, insert each stripped wire into a socket and crimp it using a special crimping tool.
Be careful that the outer insulation of the lead wires does not interfere with the socket contact part.
(Contact SMC for special crimping tools.)

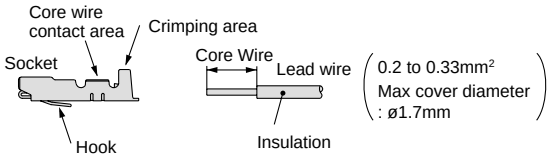

③Connection/Disconnection of socket with lead wire

●Connection

Insert lead wire and crimped socket into square holes (indicated as positive or negative) of connector. Press the socket in fully until the hook of the socket locks into the groove of the connector housing. Confirm the locked position by lightly pulling on the lead wire.

●Disconnection

To remove the socket from the connector, pull out lead wire while depressing the hook of the socket with a fine screw driver (or similar). If the socket is to be re-used, reposition the hook again.

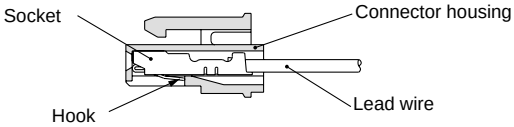

⚠ Caution

Plug Connector Lead Wire Length

Standard length is 300mm, but the following length is also available.

How to Order Connector Assembly

For DC: **SY100－30－4A－□**

Without lead wire: **SY100－30－A**
(with connector and 2pcs. of socket)

How to Order
To order a valve with lead wire length of other than 300mm, indicate part numbers of the valve without connector and the required connector ass'y separately.
(Example)2000mm lead wire length

For DC
SYJ3120-5LO-M3
SY100-30-4A-20

Lead wire length

—	300mm
6	600mm
10	1000mm
15	1500mm
20	2000mm
25	2500mm
30	3000mm
50	5000mm

⚠ Caution

Surge Voltage Suppressor

〈For DC〉
Grommet, L and M plug connector

■Standard (With polarity)

With surge voltage suppressor (□S)

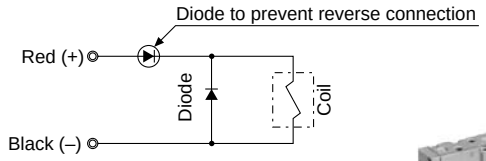

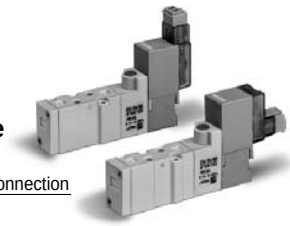

Indicator light and surge voltage suppressor (□Z)

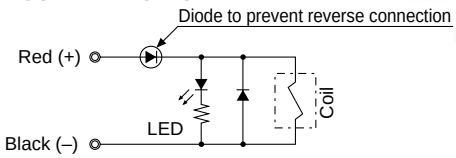

■Non polar

With surge voltage suppressor (□R)

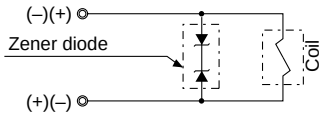

Indicator light and surge voltage suppressor (□U)

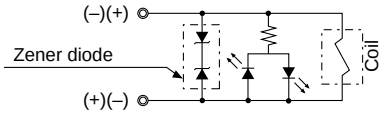

- Please correctly connect the lead wires to ⊕ (positive) and ⊖ (negative) indications on the connector.
  For non-polar type,the lead wires can be connected to either one.
- For DC voltages other than 12, 24 incorrect wiring will cause damage to the surge suppressor circuit. (Wrong polarity will cause trouble).
- Solenoids, whose lead wires have been pre-wired, are positive side red and negative side black.

⚠ Precautions

Be sure to read before handling. Refer to p.0-33 to 0-36 for Safety Instructions and common precautions.

⚠ Caution

Connector Ass'y with Protective Cover

Connector ass'y with protective cover enhances dust protection.

- Effective in preventing possible short circuit problems due to contaminants in contact with connector section.
- Cover material is chloroprene rubber which has excellent weatherability and electric insulation properties. However be careful not to allow contact with cutting oil.

How to Order

SY100 – 68 – A – □

● Lead wire length

—	300mm
6	600mm
10	1000mm
15	1500mm
20	2000mm
25	2500mm
30	3000mm
50	5000mm

Connector Ass'y with Cover/Dimenions

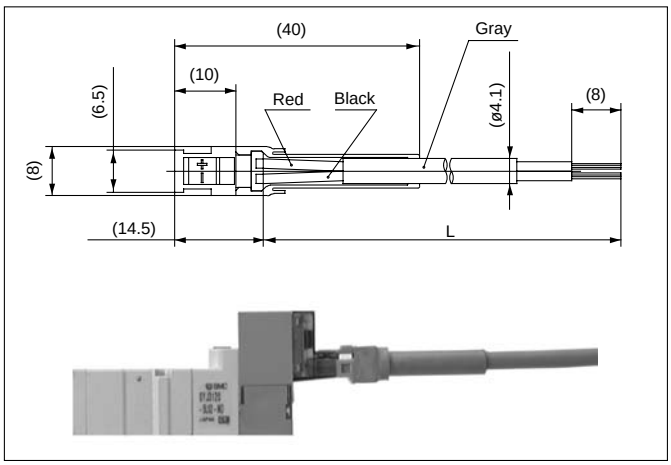

How to Order Connector Ass'y with Protective Cover

Specify the part numbers of the solenoid valve without connector and the connector ass'y with protective cover separately.

EX.1) In case of 2000mm of lead wire

SYJ3120-5LOZ-M3

SY100-68-A-20

EX.2) In case of 300mm of lead wire (Standard)

SYJ3120-5LPZ-M3

Symbol of connector ass'y with protective cover

∗ It is not necessary to indicate the part number of connector ass'y with protective cover separately in this case.

⚠ Caution

Flat Cable Manifold

Type 21P

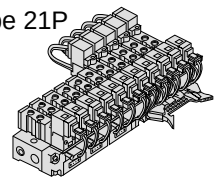

Type 32P

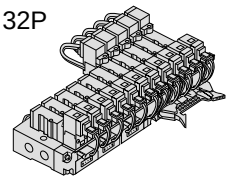

- With the flat cable manifold, each valve is wired to the manifold base. A single MIL flat cable connects the entire manifold to your power source. This greatly reduces installation time.

Internal wiring of manifold

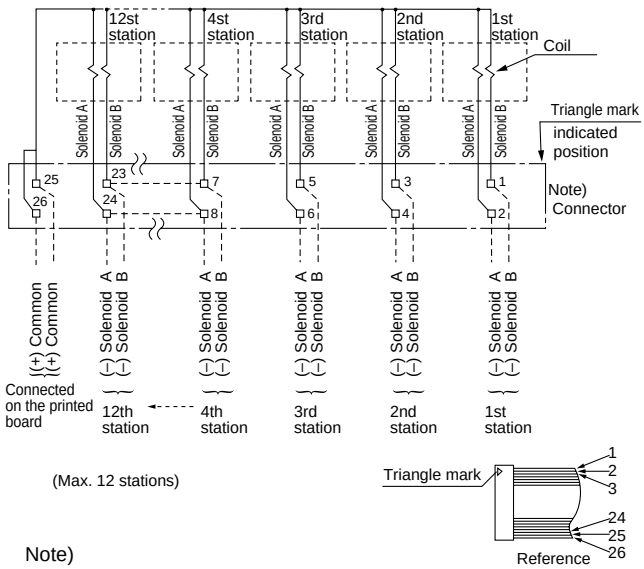

Note)
Terminal number is not indicated on the connector.
The terminal number is indicated on the connection schematic of connector, as show in the reference, means a relation of 1, 2, 3·····26 from the triangle mark side on the flat cable of connector.

- For more than 10 stations, both poles of the common should be wired.
- For single solenoid, connect to the solenoid B side.
- The maximum number of stations is 12. If more than 12 stations are required, consult SMC.
- Only non-polar valves are available for the flat cable manifold, therefore, either negative COM or positive COM wiring of the manifold is possible.

⚠ Caution

Bracket

For bracket attached styles of SYJ3000 (Single) and SYJ7000, do not use it without bracket.

⚠ Caution

Interface Regulator

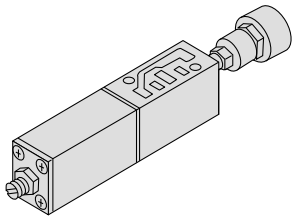

Installing an interface regulator between a valve and the manifold base makes it possible to reduce the supply pressure to that valve without changing the supply pressure of the other stations on the manifold.

Specifications

Interface regulator		ARBYJ5000	ARBYJ7000
Applicatable solenoid valve		SYJ5000	SYJ7000
Regulating port		P	P
Proof pressure		1.5MPa	
Max. operating pressure		1.0MPa	
Setting pressure range		0.05 to 0.7MPa (1)	
Ambient and fluid temperature		5 to 60°C (2)	
Thread size for connection of pressure gauge		M5 X 0.8	
Weight (kg)		0.06	0.09
Effective area at supply side(mm^2) (3) S at P_1-0.7MPa, P_2 = 0.5MPa	P→A	1.9	5.1
	P→B	2.1	5.8
Effective area at exhaust side (mm^2) (3) S at P_2 = 0.5MPa	A→EA	4.5	12.6
	B→EB	4.5	12.6

Note 1) Set the pressure within the operating pressure range of the solenoid valve.
Note 2) The maximum operating temperature for the valve is 50°C.
Note 3) The effective area listed is for a single solenoid 2 position valve mounted on a sub-plate.
Note 4) The interface regulator is only capable of regulating the "P" port pressure.

Flow rate (P→A)

●ARBYJ5000-00-P

Condition: Supply pressure 0.7MPa

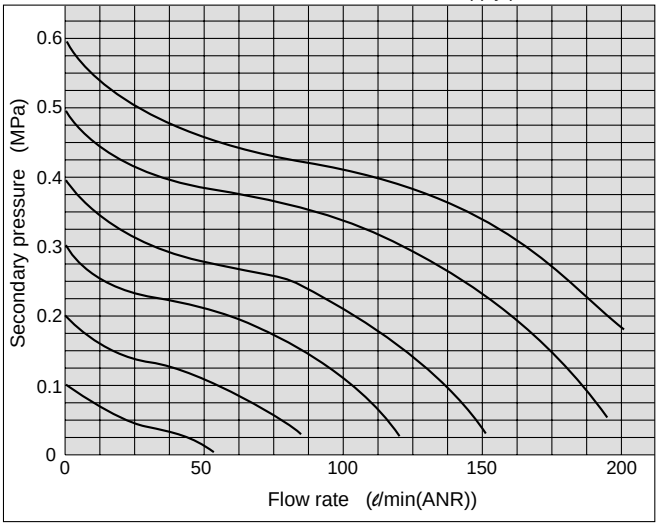

●ARBYJ7000-00-P

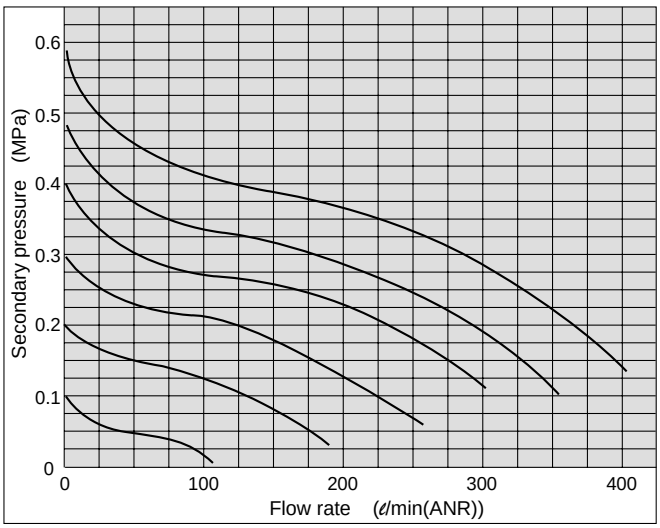

4, 5 Port Solenoid Valve Rubber Seal

Series SYJ3000

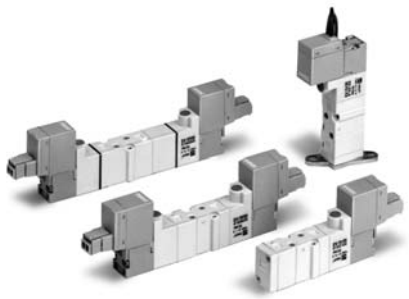

Body ported

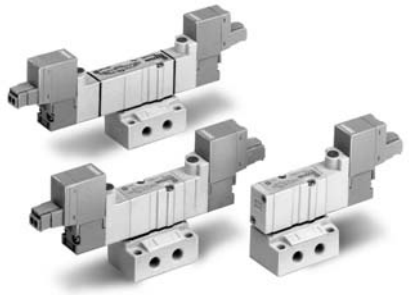

Base mounted

JIS Symbol

5 Port

2 position sinle

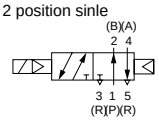

2 position double

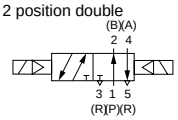

3 position closed centre

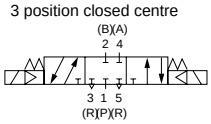

3 position exhaust centre

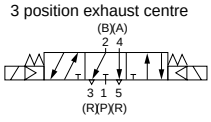

3 position prssure centre

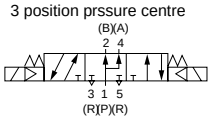

4 Port (manifold)

2 position sinle

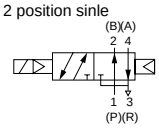

2 position double

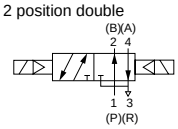

3 position closed centre

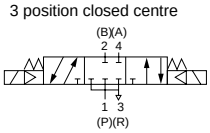

3 position exhaust centre

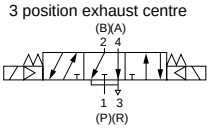

3 position prssure centre

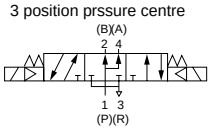

Order Made P.1.2-72

Model

Valve model		Configuration		Port size	Effective area[1] mm²(N ℓ/min)	Weight (g)[2] Gromet	Weight (g)[2] L/M plug connector
5 port Body ported	SYJ312□	2 position	Single	M3	0.9 (49.08)	33	35
	SYJ322□		Double			47	51
	SYJ332□	3 position	Closed centre			50	54
	SYJ342□		Exhaust centre				
	SYJ352□		Pressure centre				
5 port Base mounted (With sub-plate)	SYJ314□	2 position	Single	M5	1.8 (98.15)	59(33)	61(35)
	SYJ324□		Double			73(47)	77(51)
	SYJ334□	3 position	Closed centre			76(50)	80(54)
	SYJ344□		Exhaust centre				
	SYJ354□		Pressure centre				
4 port Base mounted (For manifold use only)	SYJ313□	2 position	Single	—	1.2[1] (65.76)	33	35
	SYJ323□		Double			47	51
	SYJ333□	3 position	Closed centre			50	54
	SYJ343□		Exhaust centre				
	SYJ353□		Pressure centre				

Note 1) In case of M5 and mounted on manifold base.
Note 2) ( ): Without sub-plate.

Specifications

Fluid		Air
Operating pressure range (MPa)	2 position single	0.15 to 0.7
	2 position double	0.1 to 0.7
	3 position	0.2 to 0.7
Ambient and fluid temperature °C		Max. 50
Response time (ms)[4] at 0.5MPa	2 position single, double	≤15
	3 position	≤30
Max. operating frequency (Hz)	2 position single, double	10
	3 position	3
Manual override		Non-locking push type, Push-turn-locking slotted style
Pilot exhaust		Individual pilot exhaust, Common exhaust (pilot and main valve)
Lubrication		Not required
Mounting position		Free
Impact/Vibration resistance (m/s²)[5]		150/30
Protection structure		Dust proof

Note 4) According to dynamic performance test JIS B8375-1981 (Coil temperature 20°C, at rated voltage, without surge voltage suppressor)
Note 5) Impact resistance: No malfunction resulted from the impact test using a drop impact tester. The test was performed on the axis and right angle direction of the main valve and armature, for both energized and de-energized states. (Value in the initial stage)
Vibration resistance: No malfunction occurred in a one-sweep test between 8.3 and 2000Hz. Test was performed at both energized and de-energized states to axis and right angle direction of the main valve and armature. (Value in the initial stage)

Solenoid Specifications

Electrical entry		Grommet(G)/(H), L plug connector(L), M plug connector(M)
Coil rated voltage (V)	DC	24, 12, 6, 5, 3
Allowable voltage		±10% rated voltage
Power consumption (W)[6]	DC	0.5 (With light: 0.55)
Surge voltage suppressor		Diode
Indicator light		LED

Note 6) At rated voltage

Bracket Mounting

①Insert the lower hook of the mounting bracket into the groove on the bottom of the valve as shown.

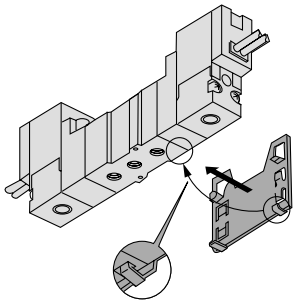

②Press the valve and mounting bracket together until the upper hook of the bracket snaps into place in the groove on top of the valve.

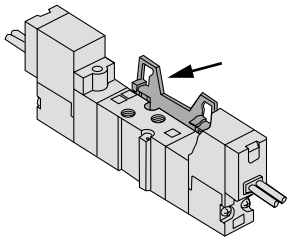

Cylinder Maximum Operating Speed

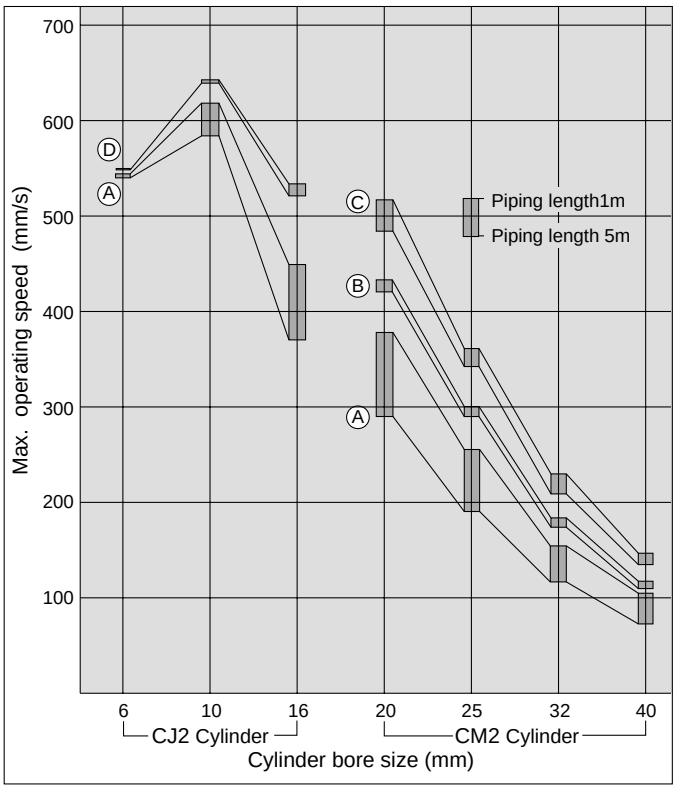

●**System Figure** ①

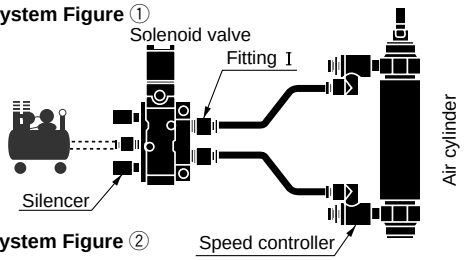

●**System Figure** ②

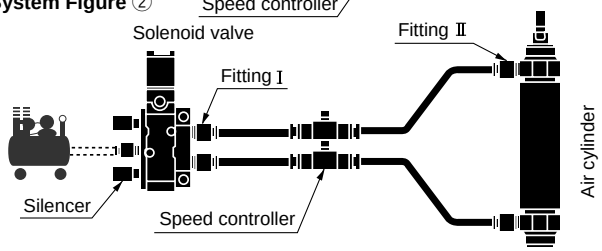

Operating conditions) Pressure: 0.5MPa, Load rate: 50%
At cylinder extended, cylinder stroke CJ2: 60mm
CM2: 300mm

System components

System	Solenoid valve	Speed controller	Silencer	Fitting (Tube O.D. X Port size) Ⅰ	Fitting (Tube O.D. X Port size) Ⅱ	Sysytem Figure
A	SYJ3000 M5 (S = 1.8mm²)	AS1301F-M5-04	AN120-M5 (S=5mm²)	ø4 X M5	—	①
B		AS1301F-M5-06		ø6 X M5	—	
C		AS2301F-01-06		ø6 X 1/8	—	
D		AS2001F-06		ø6 X M5	ø6 X M5	②

How to Order

Configuration

1	2 positon single solenoid
2	2 positon double solenoid
3	3 positon closed centre
4	3 positon exhaust centre
5	3 positon pressure centre

Light and surge voltage suppressor

—	Without light and surge suppressor
S	With surge suppressor
Z	With light and surge suppressor
U	With light and surge suppressor (Non-polar)

Bracket

—: Without bracket
F: With bracket

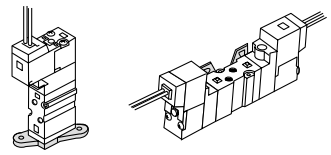

Single Double

Note) ●The double solenoid mounting bracket is supplied unattached.
●To order the double solenoid bracket for use with a single solenoid valve, order the single solenoid valve without a bracket and order the double solenoid bracket separately.
Example) SYJ3120-5M-M3, VJ3000-13-1

Rated voltage

For DC

5	24V DC
6	12V DC
V	6V DC
S	5V DC
R	3V DC
9	Less than 50 VDC

5 port

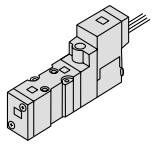

(For manifold type 20)

Body ported	SYJ3 1 2 0 — 5 M □ □ — M3 — □ -Q
Base mounted (4 port)	SYJ3 2 3 0 — 5 M □ □ -Q (For manifold use only.)
Base mounted (5 port)	SYJ3 2 4 0 — 5 M □ □ — □ -Q

4 port

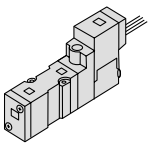

(Manifold type 31, S31, 32, S32)

5 port

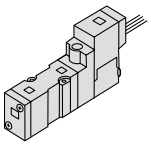

(For sub-plate, Manifold type 41, S41, 46, S46)

Body option

0: Individual exhaust for the pilot valve
3: Common exhaust for the pilot and main valves

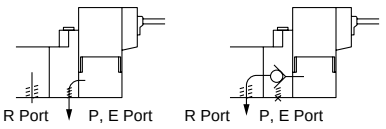

Manual override

—: Non-locking push style

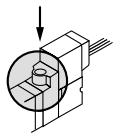

D: Push-turn-locking slotted style

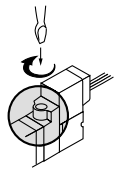

Port size

—: Without sub-plate

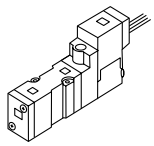

(With gasket and screws)

M5: With M5 port sub-plate

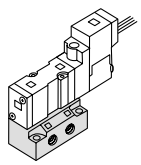

Electrical entry

24, 12, 6, 5, 3V DC			
Grommet	L plug connector	M plug connector	
G: 300mm lead wire	L: 300mm lead wire	M: 300mm lead wire	MN: Without lead wire
H: 600mm lead wire	LN: Without lead wire	LO: Without connector	MO: Without connector

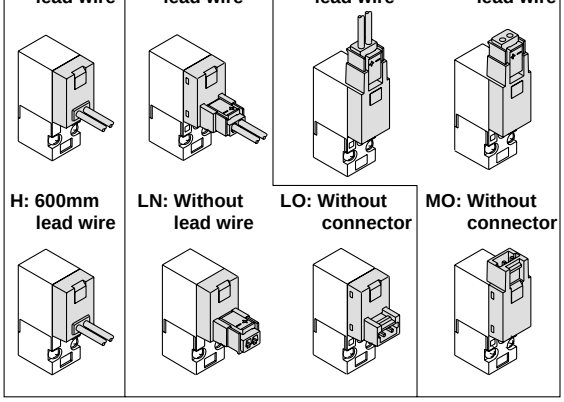

∗ LN and MN types are with 2 sockets.

Protective class class III (Mark: ⧫)

Contact SMC for other voltages (9)

Construction

2 position single

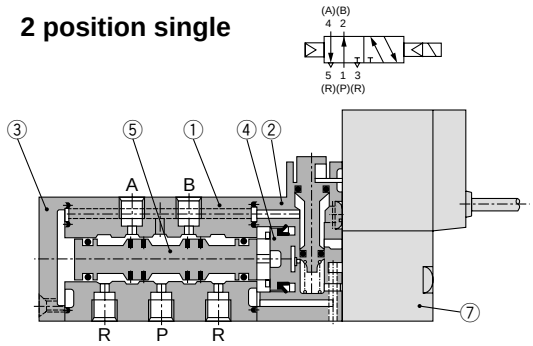

2 position double

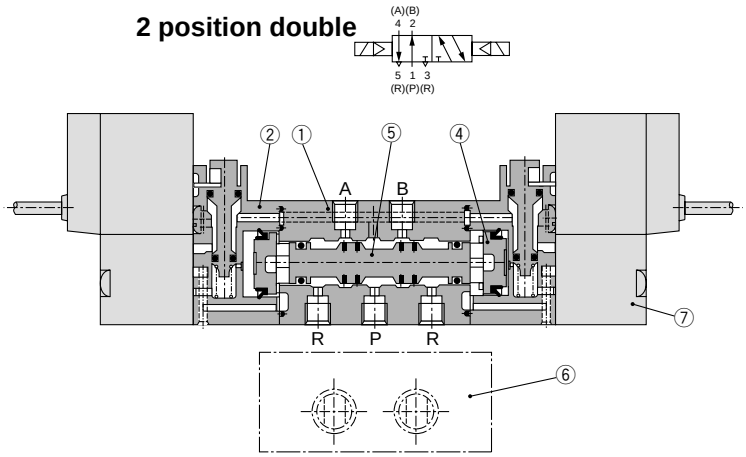

3 position closed centre/exhaust centre/pressure centre

3 position closed centre

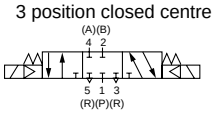

3 position exhaust centre

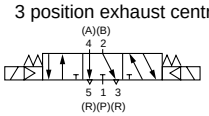

3 position pressure centre

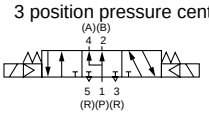

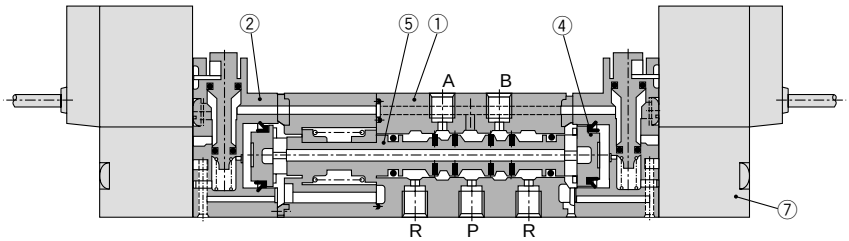

(This construction shows a closed centre.)

Component Parts

No.	Description	Material	Note
①	Body	Zinc die cast	white
②	Piston plate	Resin	white
③	End cover	Resin	white
④	Piston	Resin	—
⑤	Spool Ass'y	—	—

Replacement Parts

No.	Description	Part No.	Note
⑥	Sub-plate	SYJ3000-22-1-Q	Zinc die cast
⑦	Pilot valve	SY114-□□□-Q	

How to Order Pilot Valve Assembly

SY114 — 5 G □ -Q

Voltage

5	24V DC
6	12V DC
V	6V DC
S	5V DC
R	3V DC

Light and surge voltage suppressor

—	Without light and surge suppressor
S	With surge suppressor
Z	With light and surge suppressor
U	With light and surge suppressor (Non-polar)

Electrical entry

G	Grommet (Lead wire length: 300mm)	
H	Grommet (Lead wire length: 600mm)	
L	L plug connector	With lead wire
LN		Without lead wire
LO		Without connector
M	M plug connector	With lead wire
MN		Without lead wire
MO		Without connector

How to Order Connector Assembly

DC : SY100-30-4A- □

Without lead wire (with connector and 2pcs. of socket) : SY100-30-A

Lead wire length

—	300mm
6	600mm
10	1000mm
15	1500mm
20	2000mm
25	2500mm
30	3000mm
50	5000mm

2 Position Single

Grommet (G), (H): SYJ3120-□G/H□□-M3-Q

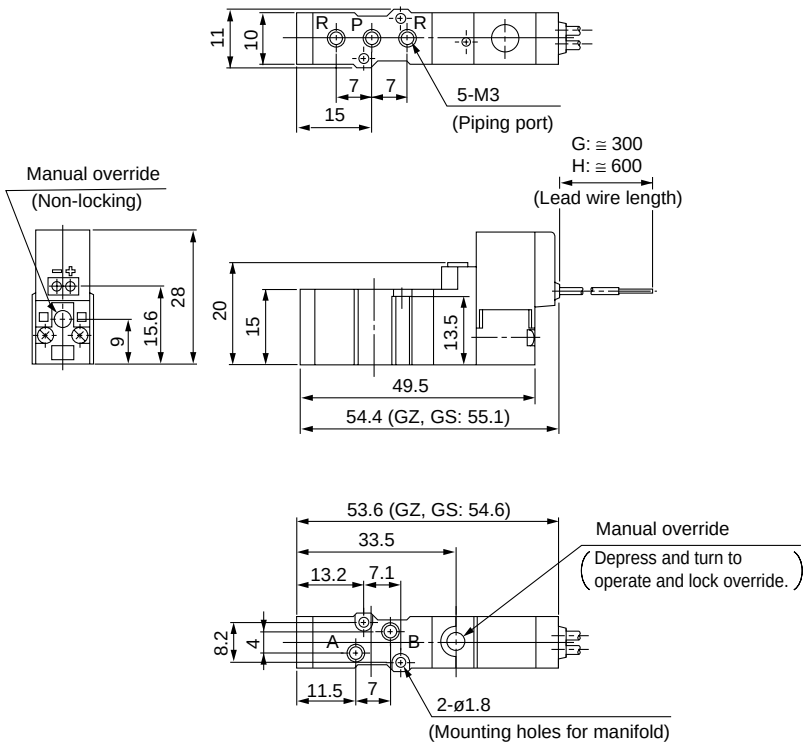

With bracket

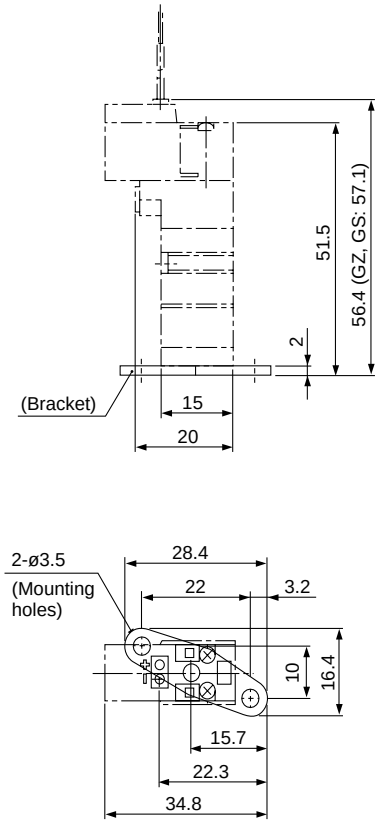

∗ Other dimensions are the same as the grommet style.

L plug connector (L): SYJ3120-□L□□-M3-Q

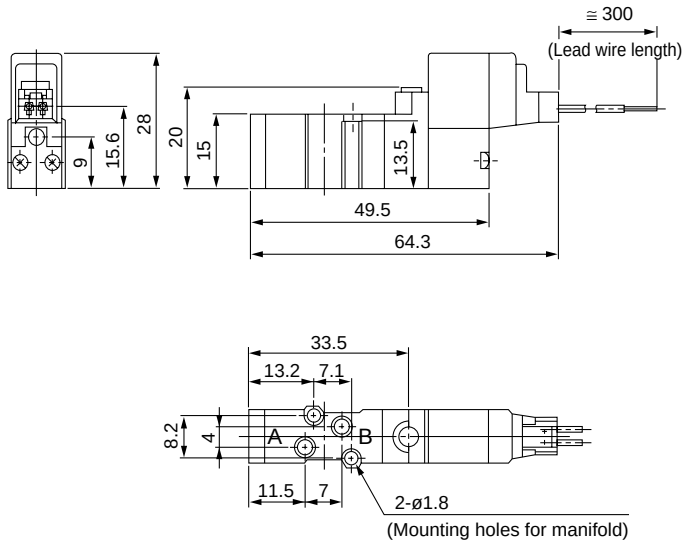

∗ Other dimensions are the same as the grommet style.

M plug connector (M): SYJ3120-□M□□-M3-Q

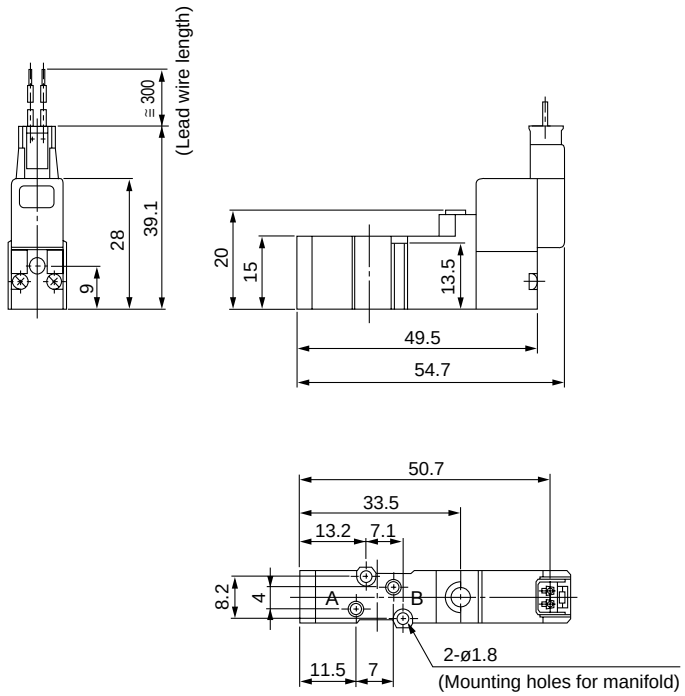

∗ Other dimensions are the same as the grommet style.

2 Position Double

Grommet (G), (H): SYJ3220-□$^{G}_{H}$□□-M3-Q

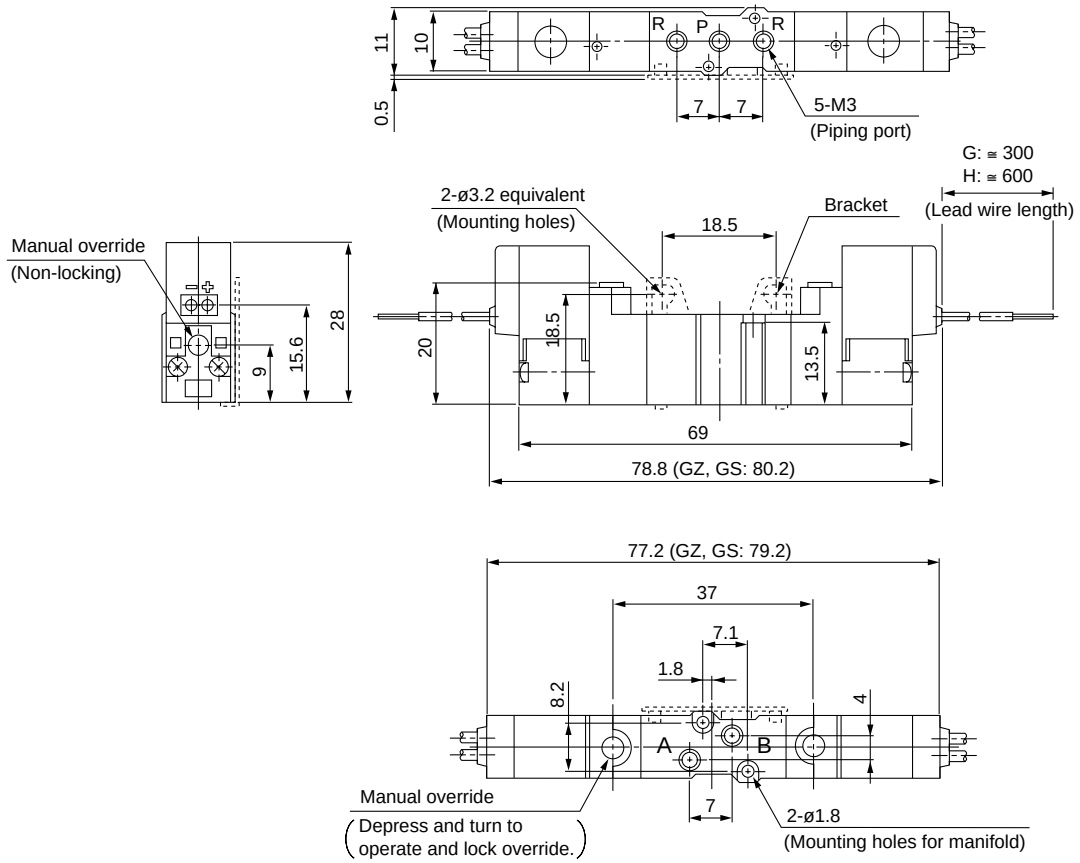

L plug connector (L): SYJ3220-□L□□-M3-Q

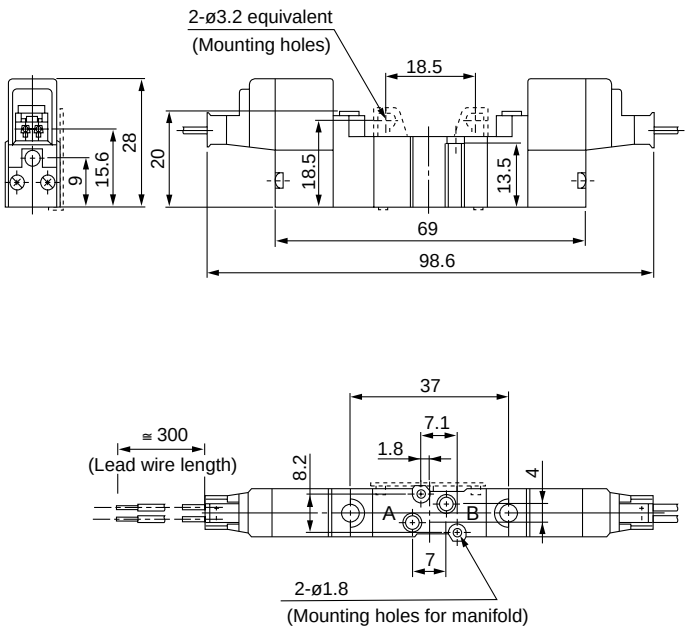

∗ Other dimensions are the same as the grommet style.

M plug connector (M): SYJ3220-□M□□-M3-Q

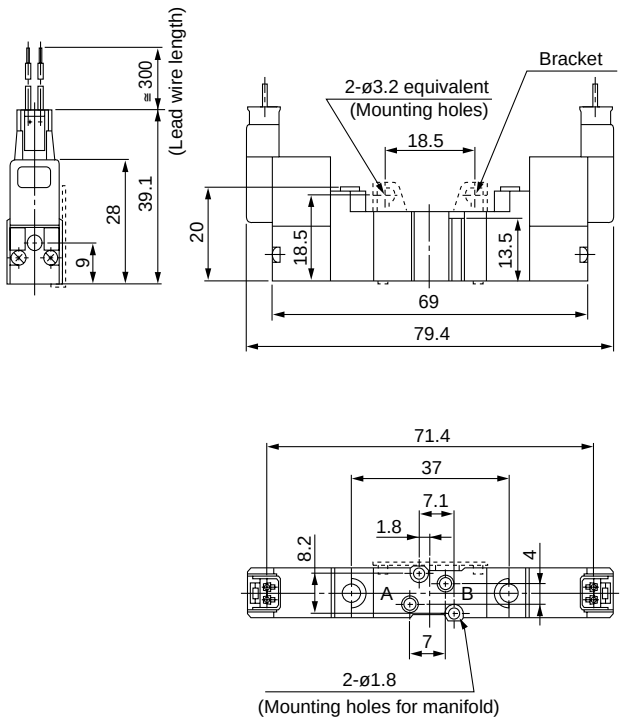

∗ Other dimensions are the same as the grommet style.

3 Position Closed Centre/Exhaust Centre/Pressure Centre

Grommet (G), (H): SYJ3$^{3}_{4}_{5}$20-□$^{G}_{H}$□□-M3-Q

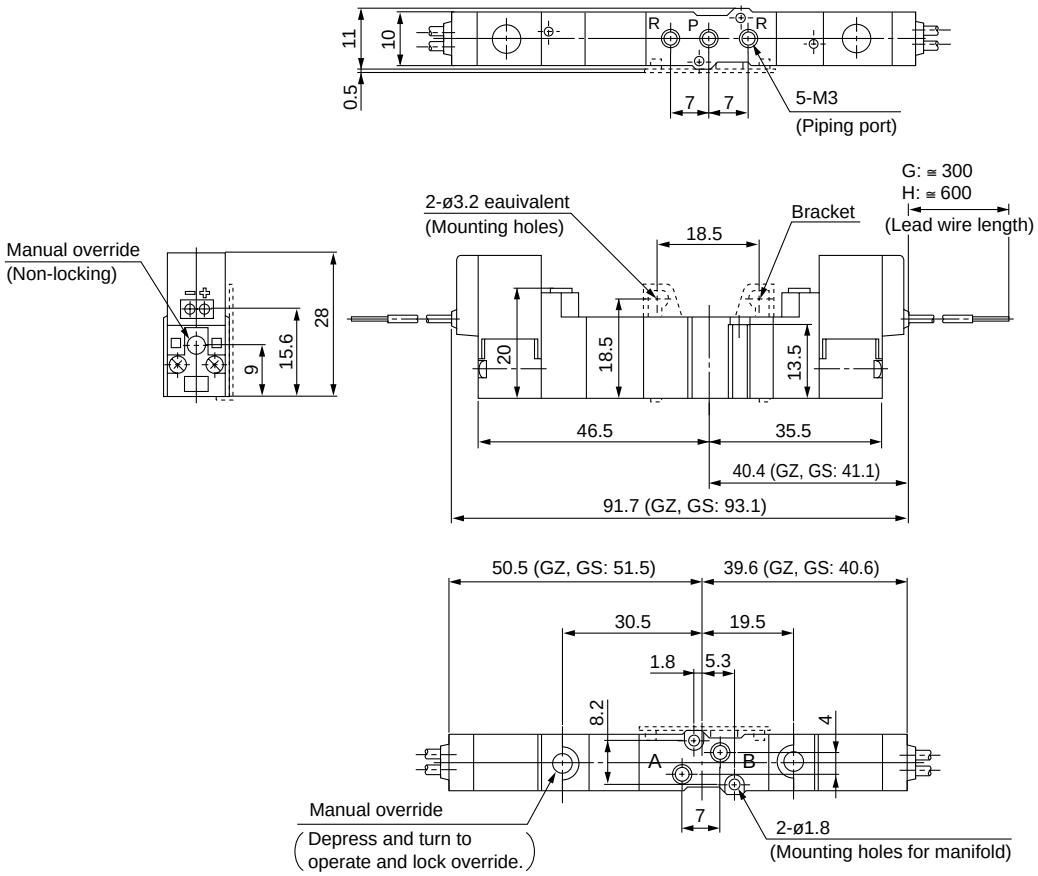

L plug connector (L): SYJ3$^{3}_{4}_{5}$20-□L□□-M3-Q

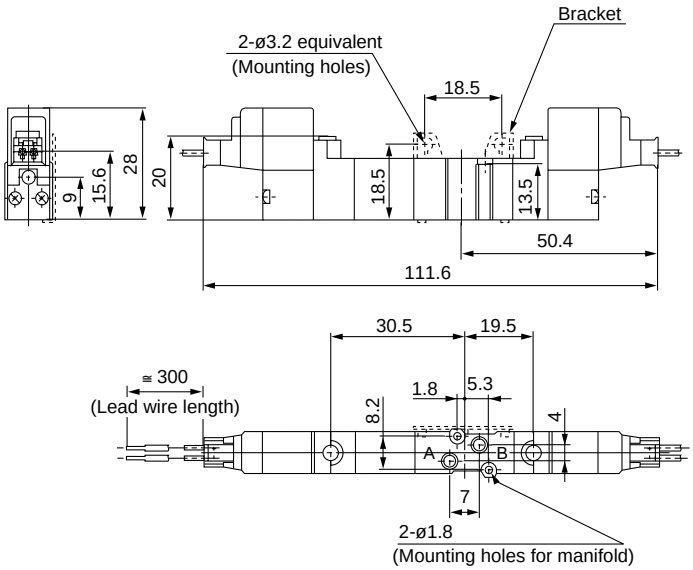

∗ Other dimensions are the same as the grommet style.

M plug connector (M): SYJ3$^{3}_{4}_{5}$20-□M□□-M3-Q

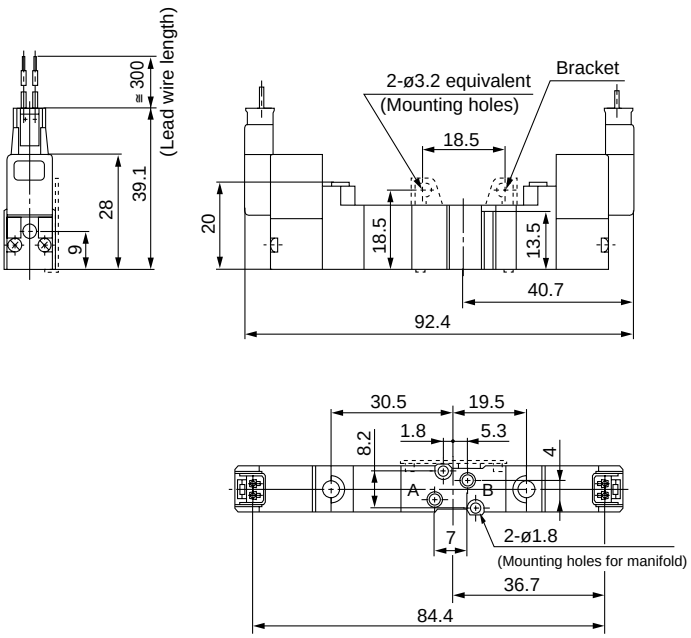

∗ Other dimensions are the same as the grommet style.

2 Position Single

Grommet (G), (H): SYJ3140-□$^{G}_{H}$□□-M5-Q

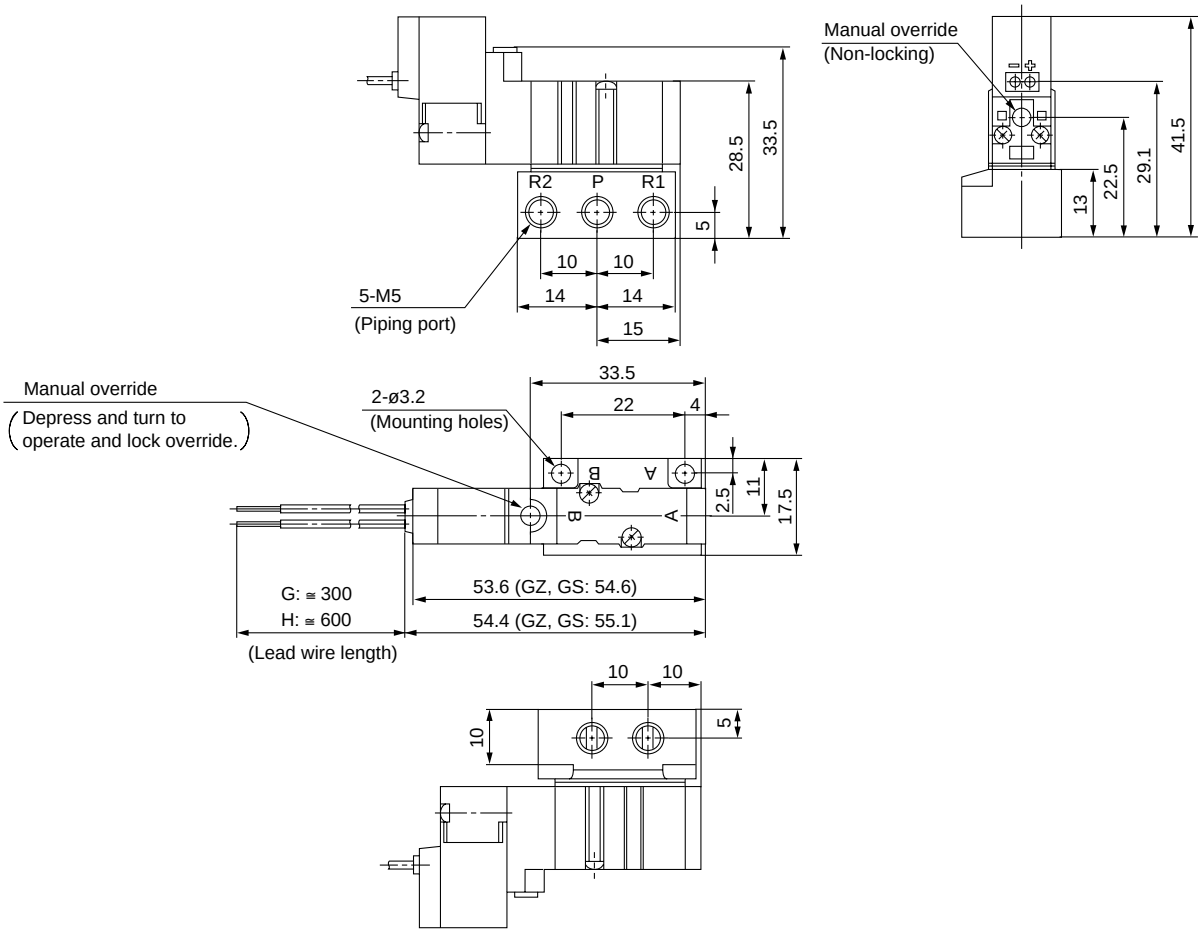

L plug connector (L): SYJ3140-□L□□-M5-Q

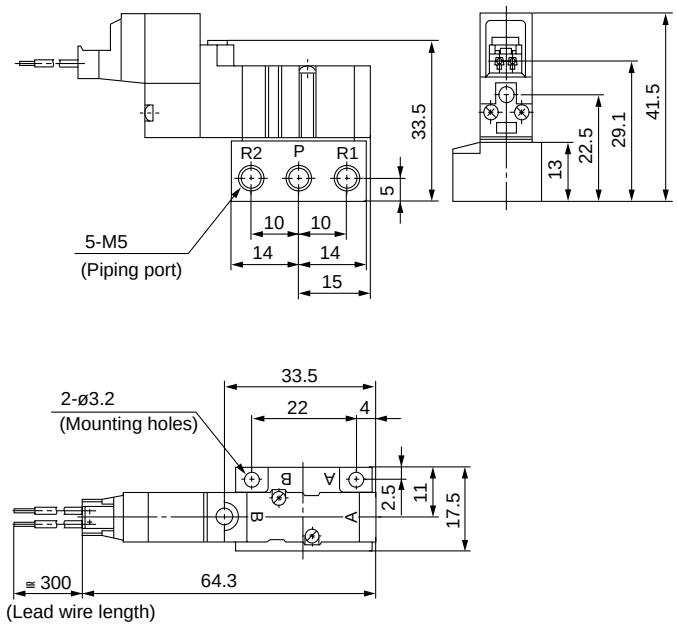

∗ Other dimensions are the same as the grommet style.

M plug connector (M): SYJ3140-□M□□-M5-Q

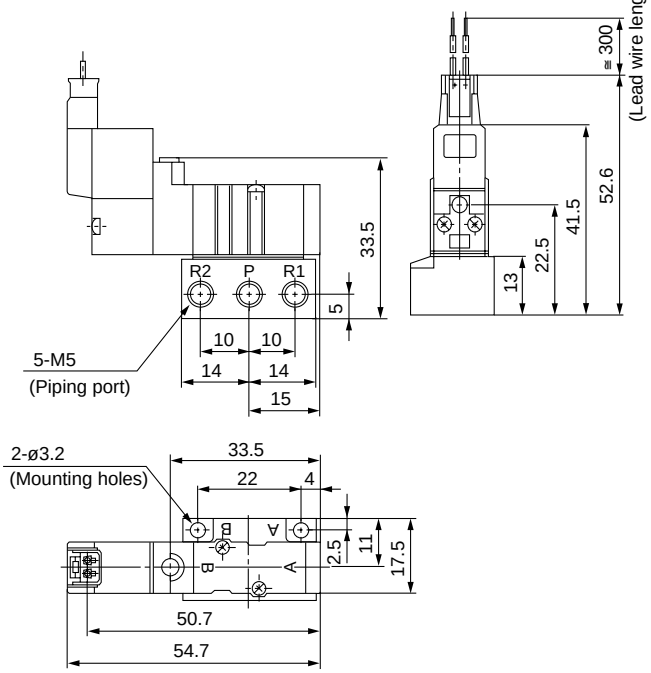

∗ Other dimensions are the same as the grommet style.

2 Position Double

Grommet (G), (H): SYJ3240-□ G/H □□-M5-Q

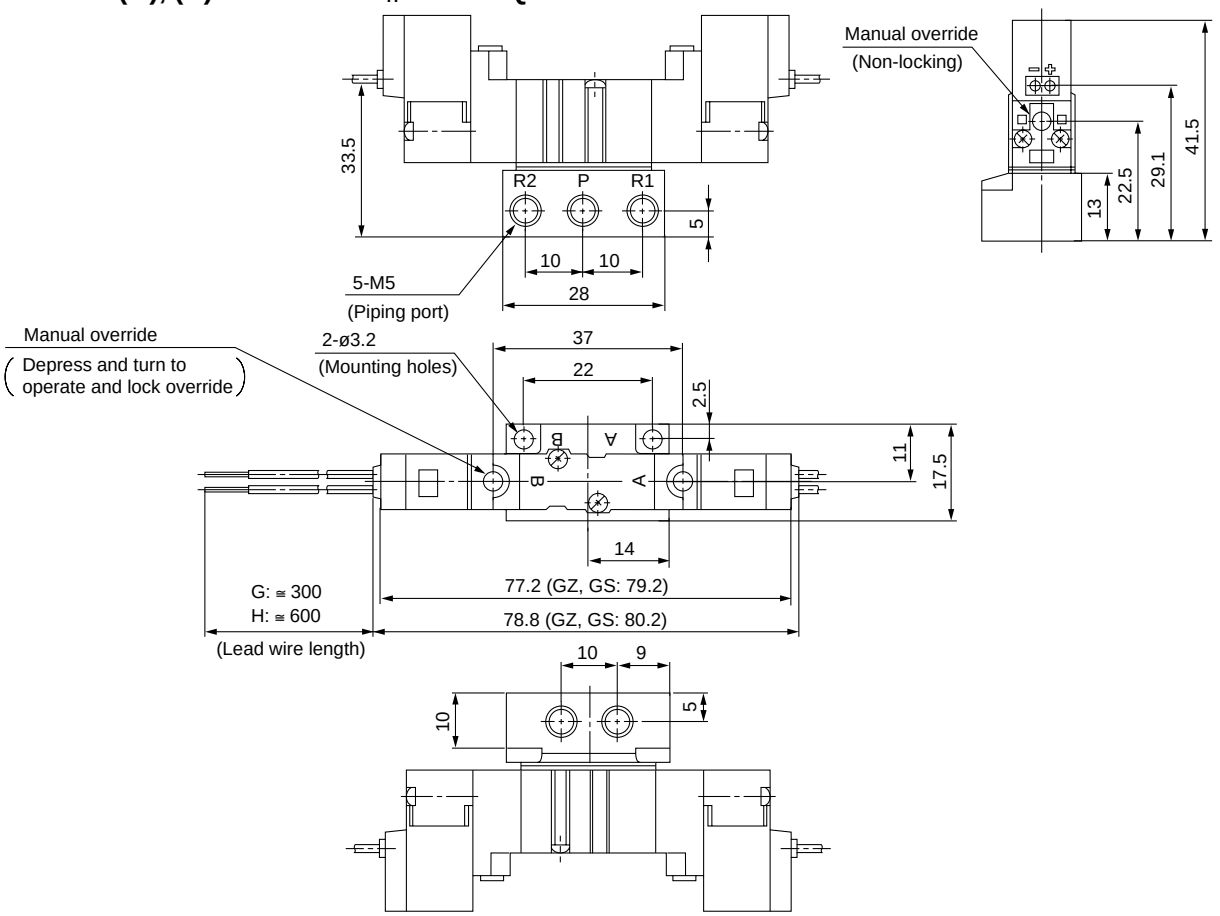

L plug connector (L): SYJ3240-□L□□-M5-Q

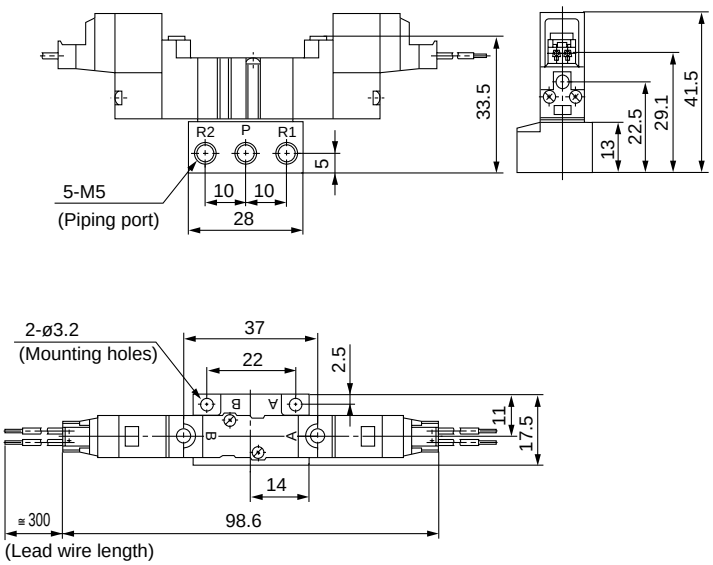

＊ Other dimensions are the same as the grommet style.

M plug connector (M): SYJ3240-□M□□-M5-Q

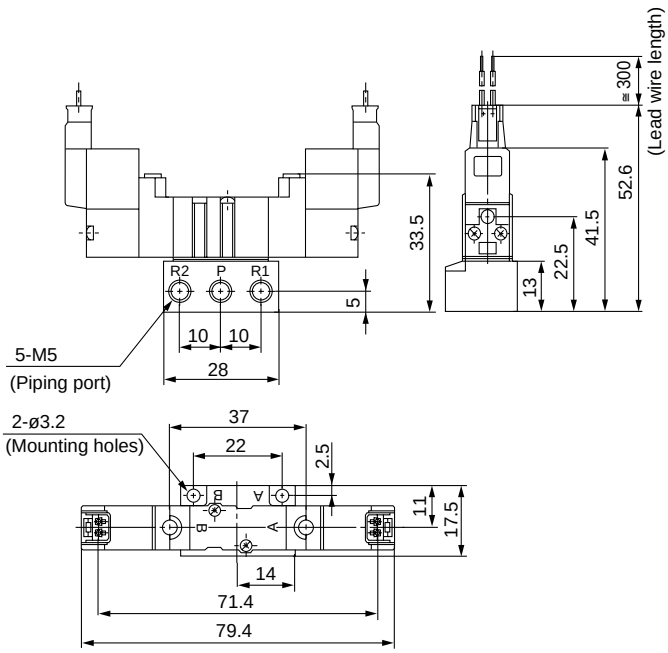

＊ Other dimensions are the same as the grommet style.

3 Position Closed Centre/Exhaust Centre/Pressure Centre

Grommet (G), (H): SYJ3$^{3}_{4}_{5}$40-□$^{G}_{H}$□□-M5-Q

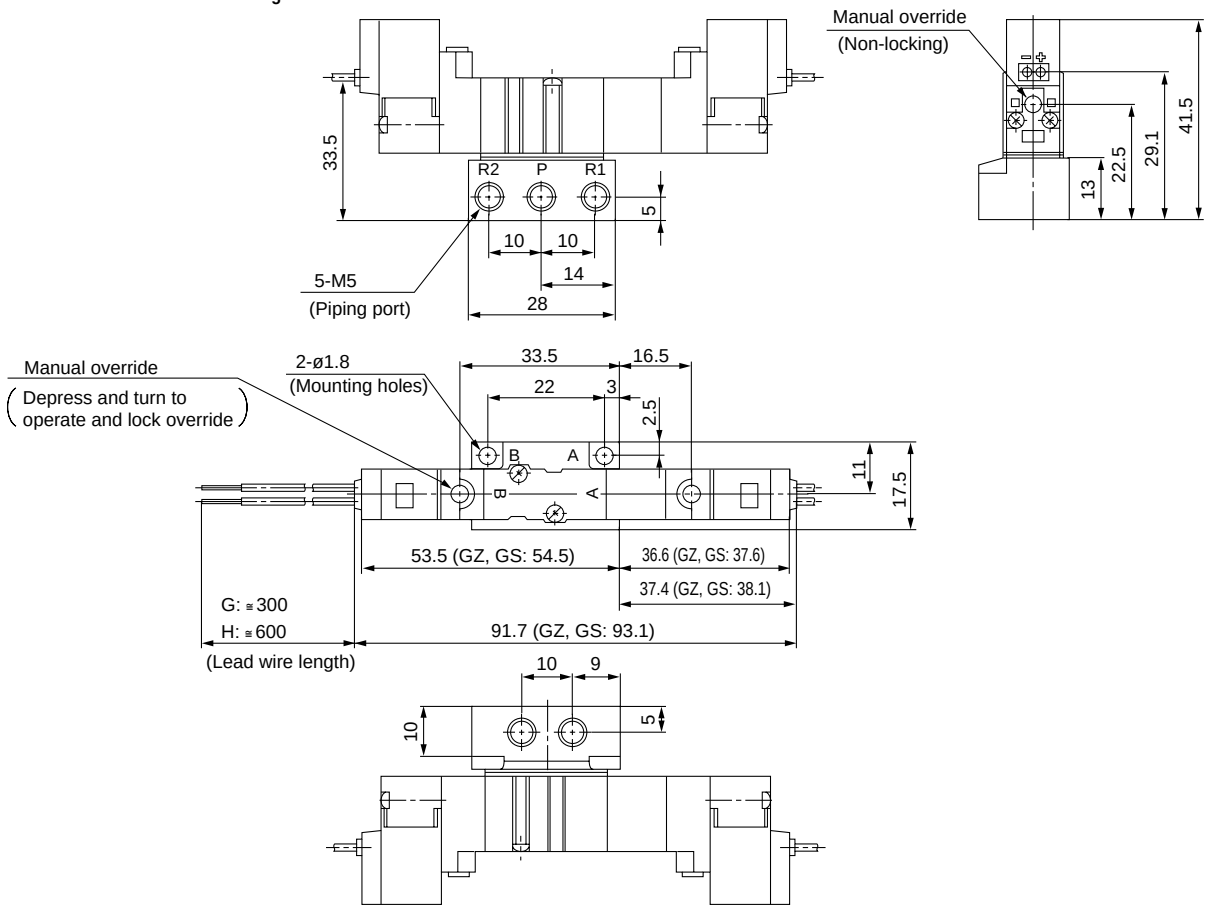

L plug connector (L): SYJ3$^{3}_{4}_{5}$40-□L□□-M5-Q

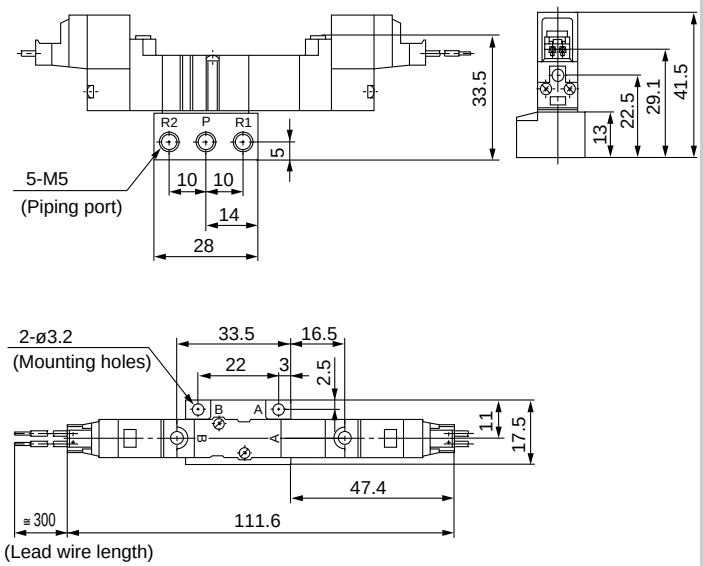

M plug connector (M): SYJ3$^{3}_{4}_{5}$40-□M□□-M5-Q

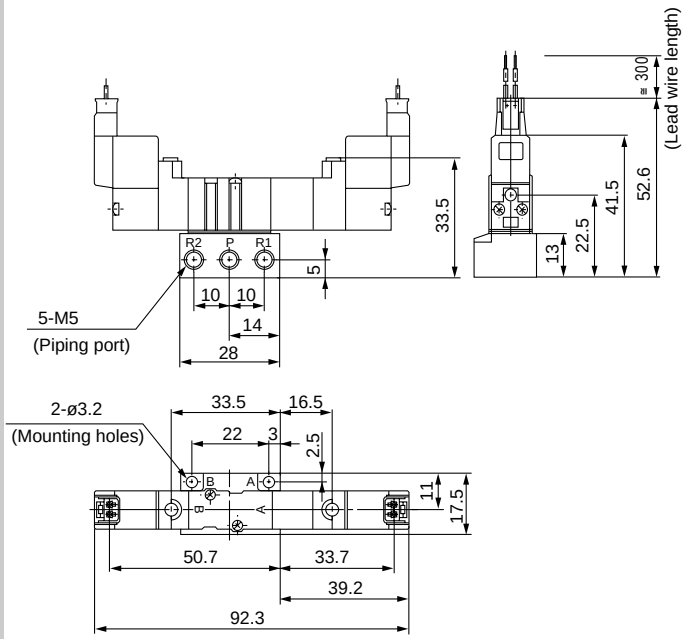

＊ Other dimensions are the same as the grommet style.

＊ Other dimensions are the same as the grommet style.

Series SYJ3000
Manifold

Standard

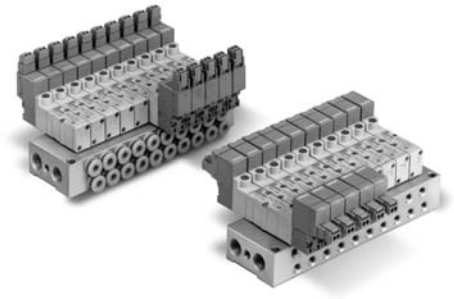

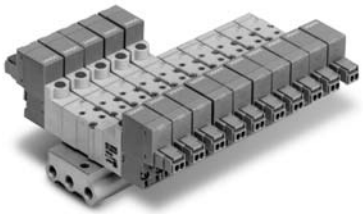

Manifold Specifications

Type		20	31,S31	32,S32	41,S41	46,S46
Manifold style		Single base style/B mount				
P(SUP)/R(EXH)style		Common SUP, Common EXH				Common SUP Individual EXH
Valve stations		2 to 20 stations				
A, B port specifications	Location	Valve	Base			
	Direction	Top	Side			
Port size	P, R port	M5		1/8		P: 1/8 R: M5
	A, B port	M3		M5, C4 (ø4 One-touch fitting)		
Effective area(1) mm²(Nℓ/min)	Body ported **SYJ3□2□**	0.9 (49.08)	—	—	—	—
	Base mounted **SYJ3□3□**	—	0.9 (49.08)	1.2(65.76)	—	—
	Base mounted **SYJ3□4□**	—	—	—	1.5(78.52)	1.0(53.98)

Note 1) Value for a single operation valve mounted on the manifold base.

How to Order Valve Manifold

Specify the part numbers for the valve(s), blank plate a'ssy and the manifold base.

Example

●**SS5YJ3-20-03-Q** ····· 1 pc. (Manifold base)
SYJ3120-5G-M3-Q ··· 2 pcs. (Valve)
SYJ3000-21-1A-Q ··· 1 pc. (Blank plate ass'y)

●**SS5YJ3-S41-03-C4-Q** ····· 1 pc. (Manifold base)
SYJ3140-5LZ-Q ····· 2 pcs. (Valve)
SYJ3000-21-2A-Q ····· 1 pc. (Blank plate ass'y)

∗ Use manifold specification sheet.

Flat Cable Manifold

●Multiple valve wiring is simplified through the use of the flat cable connector.

●Clean appearance

With the flat cable manifold, each valve is wired to the manifold base.
A single MIL specification flat cable connects the entrie manifold to the power source.
This greaty reduces installation time.

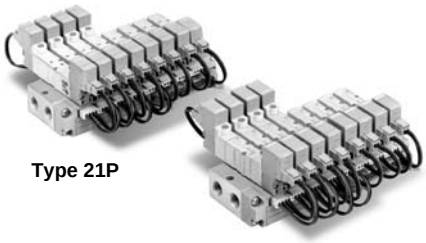

Type 21P

Type 32P

Flat Cable Manifold Specifications/(Refer to p.1.2-28 for dimensions.)

Type		21P	32P
Manifold style		Single base style/B mount	
P(SUP)/R(EXH)style		Common SUP/CommonEXH	
Valve stations		4 to 12 stations	
A,B port specifications	Location	Valve	Base
	Direction	Top	Side
Port size	P, R port	1/8	
	A, B port	M3	M5, C4 (ø4 One-touch fitting)
Effective area (1) mm²(Nℓ/min)	SYJ3□23	0.9 (49,08)	—
	SYJ3□33	—	1.2 (65.76)
Connector		Socket: 26 poles MIL type with strain relief conforms to MIL-C-83503	
Internal wiring (2)		Both for +COM and –COM	
Rated voltage		24V DC, 12V DC	

Note 1) Value for a single operation of 2 position valve mounted on manifold base.
Note 2) The withstand voltage specification for the wiring unit section conforms to JIS C0704, Grade Ⅰ.or its equivalent.

How to Order Valve Manifold

●SS5YJ3-32P-07-C4- Q·····1 pc. (Manifold base)	SYJ3000-21-4A-Q ···1 pc. (Blank plate ass'y)
SYJ3133-5LOU-Q ·····3 pcs. (Valve)	SY3000-37-28A·····3 pcs. (Connector ass'y)
SYJ3233-5LOU-Q ·····3 pcs. (Valve)	SY3000-37-29A·····3 pcs. (Connector ass'y)

*Use manifold specification sheet.

⚠ Caution

The manifold can be wired for either positive or negative common because only non-polar valves are used.
The use of valves other than non polar types are not recommended and may cause damage to the electrical circuit.

How to Order Valve

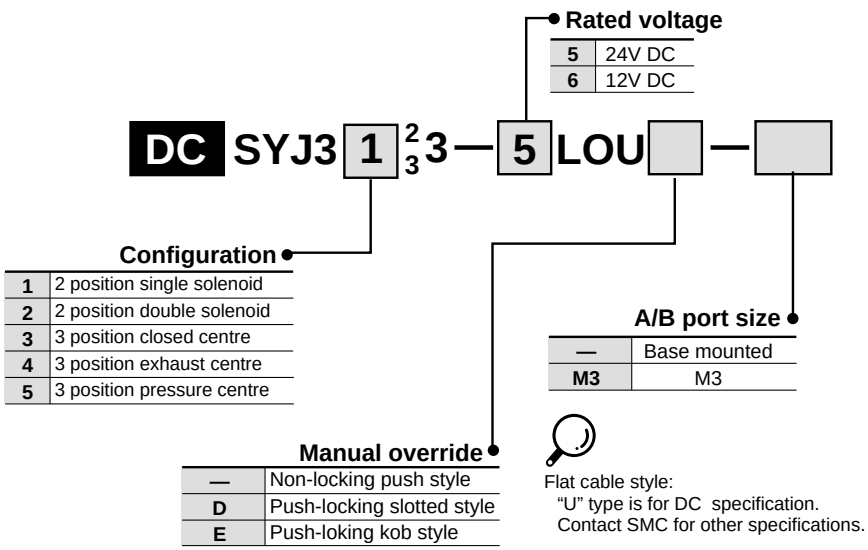

⚠ Protective class
class III (Mark: ⦂)

How to Order Connector Ass'y

For 12V/24V DC

Single solenoid	SY3000-37-28A
Double solenoid 3 position	SY3000-37-29A

For 100V DC

Single solenoid	SY3000-37-46A
Double solenoid 3 position	SY3000-37-47A

Common SUP/Common EXH

Note) For more than 10 stations, supply air to both sides of "P" port and exhaust air from both sides of "R" port.

20 Type (5 Port/Body ported)

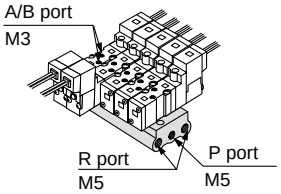

How to Order

SS5YJ3--20--05-Q

Stations

02	2 stations
:	:
20	20 stations

Applicable solenoid valve
SYJ3□20-□□□□-M3-Q
SYJ3□23-□□□□-M3-Q

Applicable blank plate assembly
SYJ3000-21-1A-Q

31 Type (4 Port/Base mounted)

31 Type **S31 Type** (Single solenoid coil is located on same side as the A, B port.)

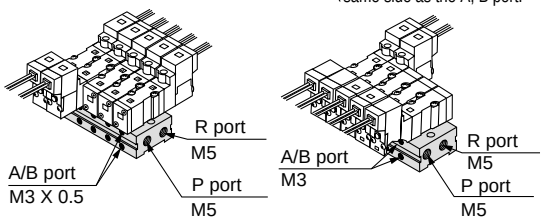

How to Order

SS5YJ3--□31--05--M3-Q

Valve mounting direction

—	Single solenoid coil is located on opposite side as the A, B port.
S	Single solenoid coil is located on same side as the A, B port.

Stations

02	2 stations
:	:
20	20 stations

Applicable solenoid valve
SYJ3□30-□□□□-Q
SYJ3□33-□□□□-Q

Appilcable blank plate assembly
SYJ3000-21-2A-Q

32 Type (4 Port/Base mounted)

32 Type **S32 Type** (Single solenoid coil is located on same side as the A, B port.)

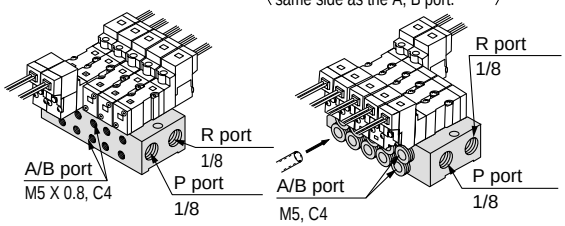

How to Order

SS5YJ3--□32--05--M5□-Q

Valve mounting direction

—	Single solenoid coil is located on opposite side as the A, B port.
S	Single solenoid coil is located on same side as the A, B port.

Stations

02	2 stations
:	:
20	20 stations

A, B port side

M5	M5
C4	ø4 One-touch fitting

Thread

-	Rc(PT)
F	G(PF)
N	NPT
T	NPTF

41 Type (5 Port/Base mounted)

41 Type **S41 Type** (Single solenoid coil is located on same side as the A, B port.)

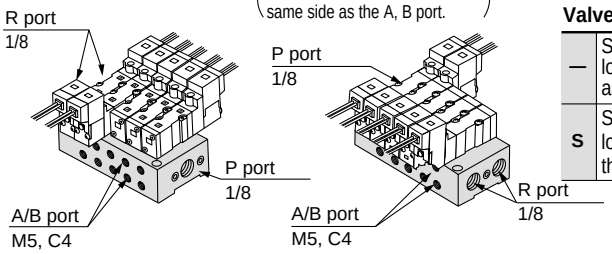

How to Order

SS5YJ3--□41--05--C4□-Q

Valve mounting direction

—	Single solenoid coil is located on opposite side as the A, B port.
S	Single solenoid coil is located on same side as the A, B port.

Stations

02	2 stations
:	:
20	20 stations

A, B port side

M5	M5
C4	ø4 One-touch fitting

Thread

-	Rc(PT)
F	G(PF)
N	NPT
T	NPTF

Applicable solenoid valve
SYJ3□40-□□□□-Q
SYJ3□43-□□□□-Q

Appicable blank plate assembly
SYJ3000-21-2A-Q

Common SUP/Individual EXH

Note) For more than 10 stations, supply air to both sides of "P" port.

46 Type (5 Port/Base mounted)

46 Type **S46 Type** (Single solenoid coil is located on same side as the A, B port.)

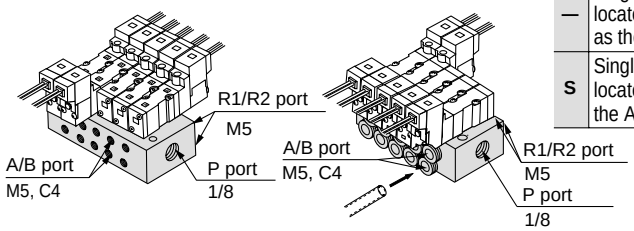

How to Order

SS5YJ3--□46--05--M5□-Q

Valve mounting direction

—	Single solenoid coil is located on opposite side as the A, B port.
S	Single solenoid coil is located on same side as the A, B port.

Stations

02	2 stations
:	:
20	20 stations

A, B port side

M5	M5
C4	ø4 One-touch fitting

Thread

-	Rc(PT)
F	G(PF)
N	NPT
T	NPTF

Applicable solenoid valve
SYJ3□40-□□□□-Q
SYJ3□43-□□□□-Q

Applicable blank plate assembly
SYJ3000-21-2A-Q

⚠ Protective class
class III (Mark:◇)

Flat Cable Manifold

Common SUP/Individual EXH

Note) For more than 10 stations, supply air to both sides of "P" port and exhaust air from both sides of "R" port.

21P Type

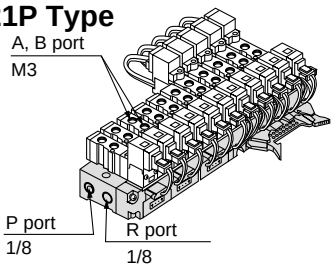

How to Order

SS5YJ3--21P--07 □-Q

Stations

04	4 stations
:	:
12	12 stations

Thread

-	Rc(PT)
F	G(PF)
N	NPT
T	NPTF

Applicable valve
Refer to the p.1.3.-19.

Applicable connector assembly
Refer to the p.1.3-19.

Applicable blank plate assembly
SYJ3000-21-3A-Q
(With dust cap)

32P Type

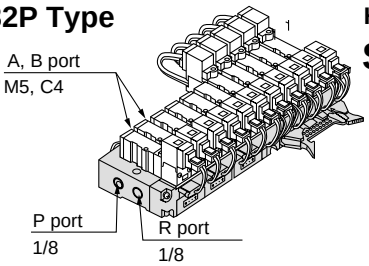

How to Order

SS5YJ3--32P--07--C4 □-Q

Stations

04	4 stations
:	:
12	12 stations

A, B port side

M5	M5
C4	ø4 One-touch fitting

Thread

-	Rc(PT)
F	G(PF)
N	NPT
T	NPTF

Applicable valve
Refer to the p.1.3-19.

Applicable connector assembly
Refer to the p.1.3-19.

Applicable blank plate assembly
SYJ3000-21-3A-Q
(With dust cap)

Installation of the SYJ300 Valves on the SY3000 Manifold.

The SYJ3000 series valves can be mounted on the manifold for the SYJ3000 series.

①**SS5YJ3-20, SS5YJ3-21P**
The 3 port valve can be used on the 4 port manifold by simply sealing off the unused "R" port with plug SYJ3000-33-1.
Applicable solenoid valve
SYJ312, SYJ312M
SYJ322, SYJ322M

②**SS5YJ3-31, -S31, SS5YJ3-32, -S32, SS5YJ3-46, -S46, SS5YJ3-32P**
The 3 port valve can be used on the 4 port manifold without modification. The A port of the valve will flow out of the B port of the manifold.
Applicable solenoid valve
SYJ314, SYJ314M
SYJ324, SYJ324M

③**SS5YJ3-41, -S41**
The 3 port valve can be used on the 4 port manifold by simply sealing off the unused "R" port with plug SYJ3000-33-1. The A port of the valve will flow out of the B port of the manifold.
Applicable solenoid valve
SYJ314, SYJ314M
SYJ324, SYJ324M

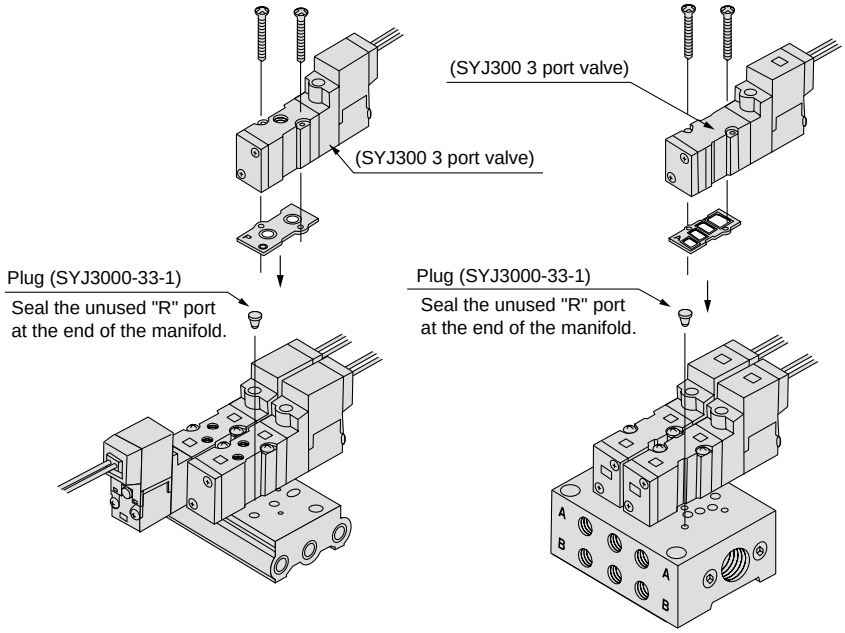

SS5YJ3-20 **SS5YJ3-41**

A port of the 3 port valve flows out of the manifold B port.

Combination of Solenoid Valve, Manifold Gasket and Manifold Base

5 port body ported (SYJ3□2$^{0}_{3}$)

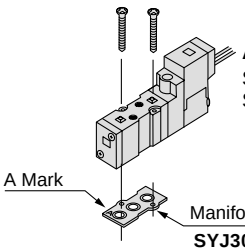

Applicable manifold base
SS5YJ3-20
SS5YJ3-21P

4 port base mounted (SYJ3□3$^{0}_{3}$)

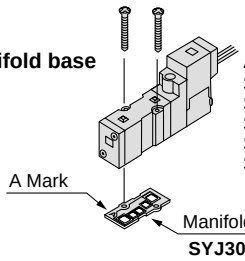

Applicable manifold base
SS5YJ3-31
SS5YJ3-S31
SS5YJ3-32
SS5YJ3-S32
SS5YJ3-32P

5 port base mounted (SYJ3□4$^{0}_{3}$)

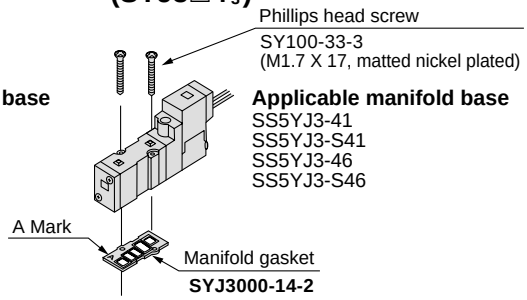

Applicable manifold base
SS5YJ3-41
SS5YJ3-S41
SS5YJ3-46
SS5YJ3-S46

Combination of Blank Plate Ass'y and Manifold Base

Blank plate ass'y SYJ3000-21-1A-Q

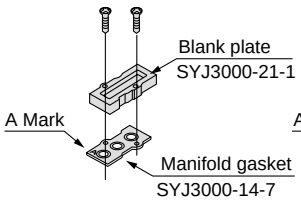

Applicable manifold base
SS5YJ3-20

Blank plate ass'y SYJ3000-21-2A-Q

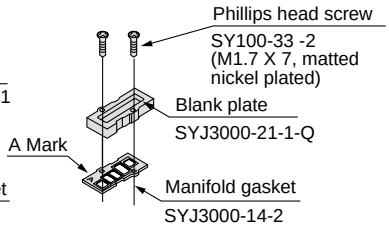

Applicable manifold base
(sub-plate)
SS5YJ3-41
SS5YJ3-S41
SS5YJ3-46
SS5YJ3-S46
SS5YJ3-31
SS5YJ3-S31
SS5YJ3-32
SS5YJ3-S32

Note) Manifold gasket "VJ3000-14-2" can be used with the following manifold bases.
SS5YJ3-31
-S31
-32
-S32

Difference between SYJ3□3$^{0}_{3}$ and SYJ3□4$^{0}_{3}$

SYJ3□30, 3□33 (4 port)

SYJ3□40, 3□43 (5 port)

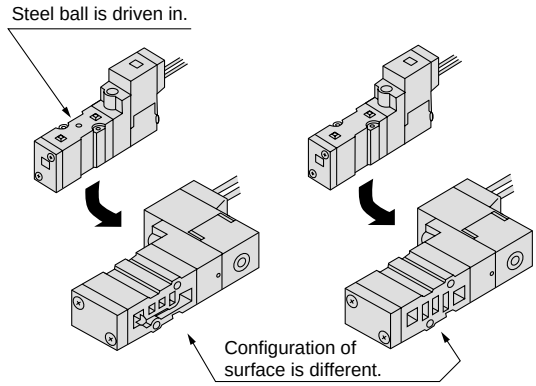

Blank plate ass'y SYJ3000-21-4A-Q

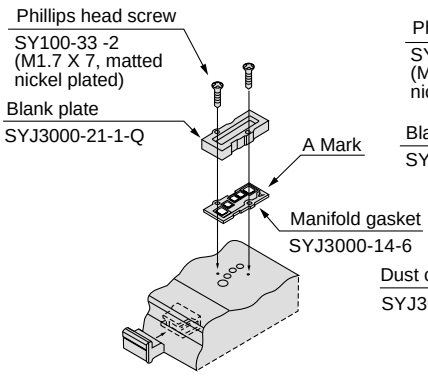

Applicable manifold base
SS5YJ3-32P

Blank plate ass'y SYJ3000-21-3A-Q

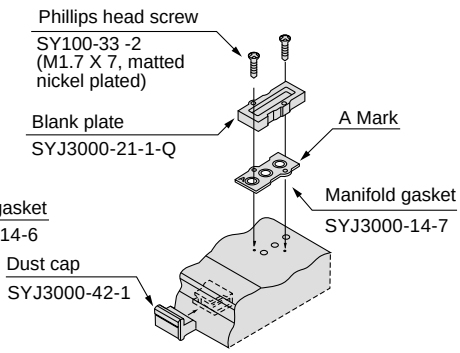

Applicable manifold base
SS5YJ3-21P

20 Type Manifold: Top Ported/SS5YJ3-20-Station-Q

Grommet (G), (H)

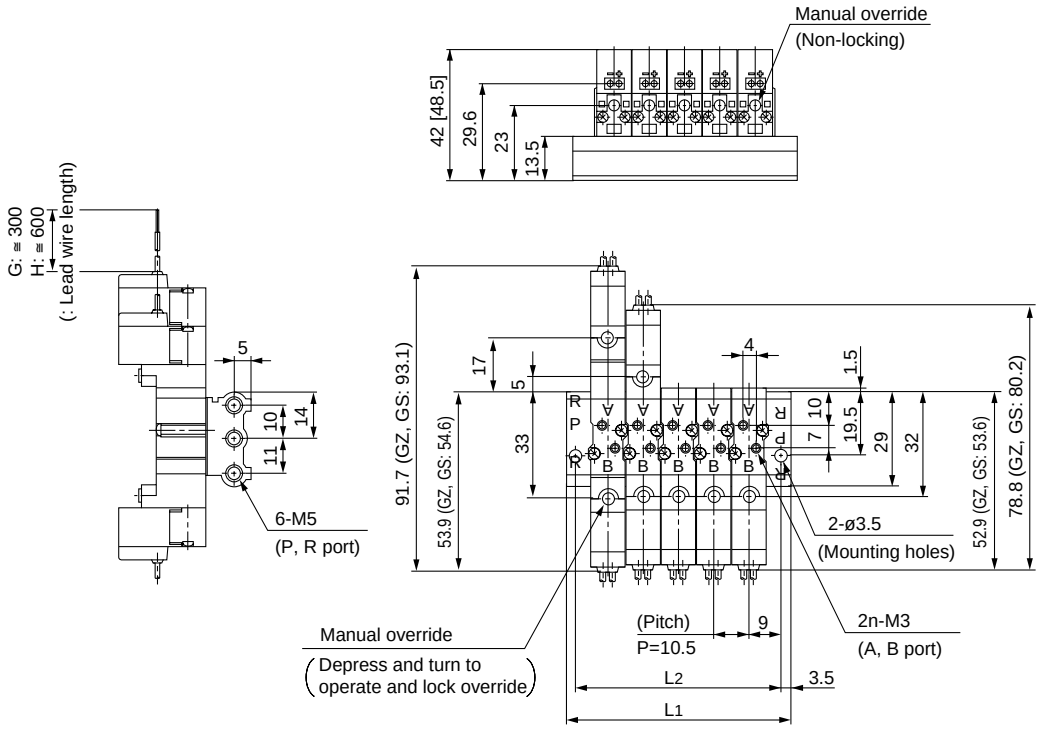

L plug connector (L)

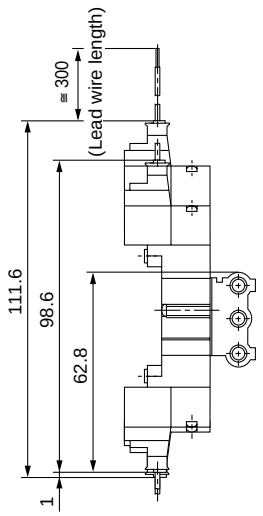

∗ Other dimensions are the same as the grommet style.

M plug connector (M)

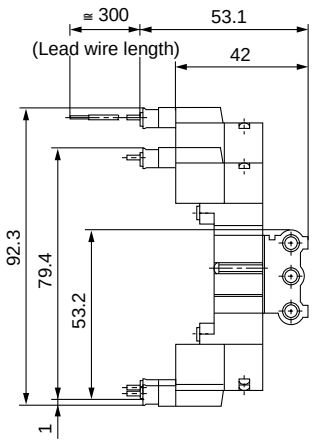

∗ Other dimensions are the same as the grommet style.

Stations	2	3	4	5	6	7	8	9	10	11	12	13	14	15	16	17	18	19	20
L1	35.5	46	56.5	67	77.5	88	98.5	109	119.5	130	140.5	151	161.5	172	182.5	193	203.5	214	224.5
L2	28.5	39	49.5	60	70.5	81	91.5	102	112.5	123	133.5	144	154.5	165	175.5	186	196.5	207	217.5

31 Type Manifold: Side Ported/SS5YJ3-31-Station-M3 -Q

Grommet (G), (H)

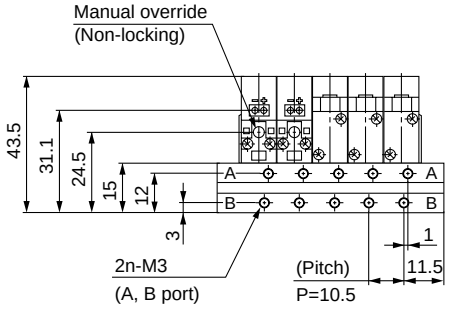

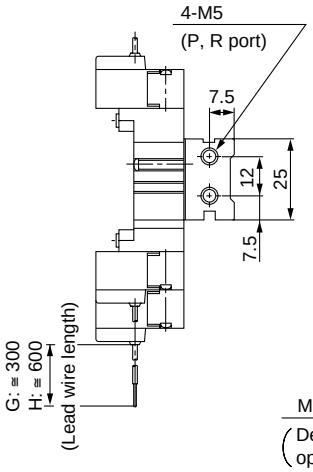

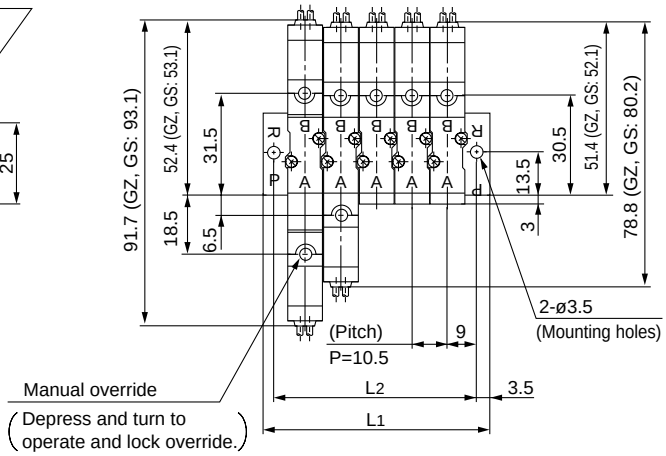

L plug connector (L)

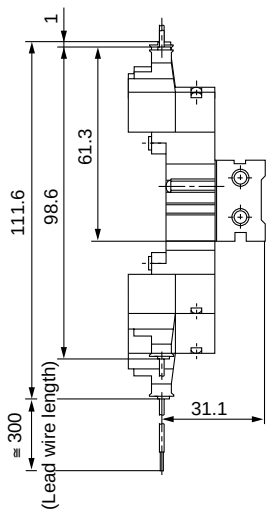

∗ Other dimensions are the same as the grommet style.

M plug connector (M)

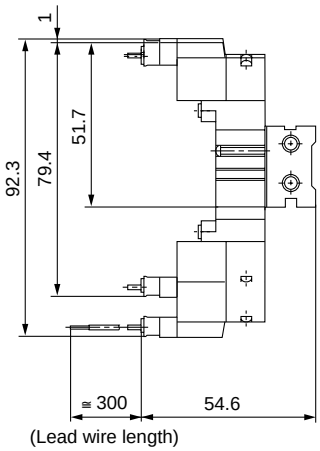

∗ Other dimensions are the same as the grommet style.

S31 Type/Side Ported (Single solenoid coil is located on same side as the A, B port.)

SS5YJ3-S31-Station-M3-Q

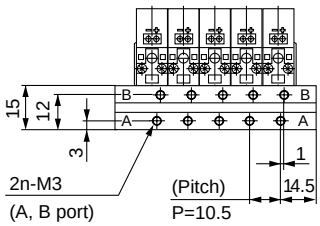

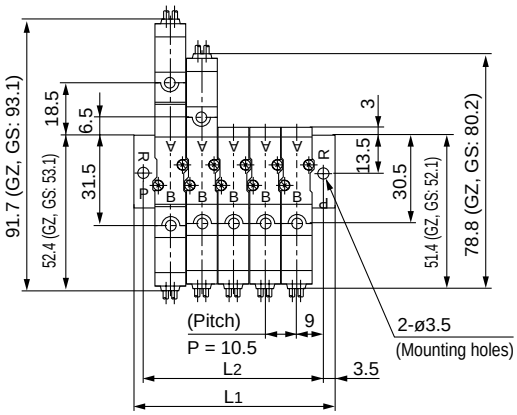

∗ Other dimensions are the same as style 31.

Stations	2	3	4	5	6	7	8	9	10	11	12	13	14	15	16	17	18	19	20
L1	35.5	46	56.5	67	77.5	88	98.5	109	119.5	130	140.5	151	161.5	172	182.5	193	203.5	214	224.5
L2	28.5	39	49.5	60	70.5	81	91.5	102	112.5	123	133.5	144	154.5	165	175.5	186	196.5	207	217.5

32 Type Manifold: Side Ported/SS5YJ3-32-Station-M5, C4□-Q

Grommet (G), (H)

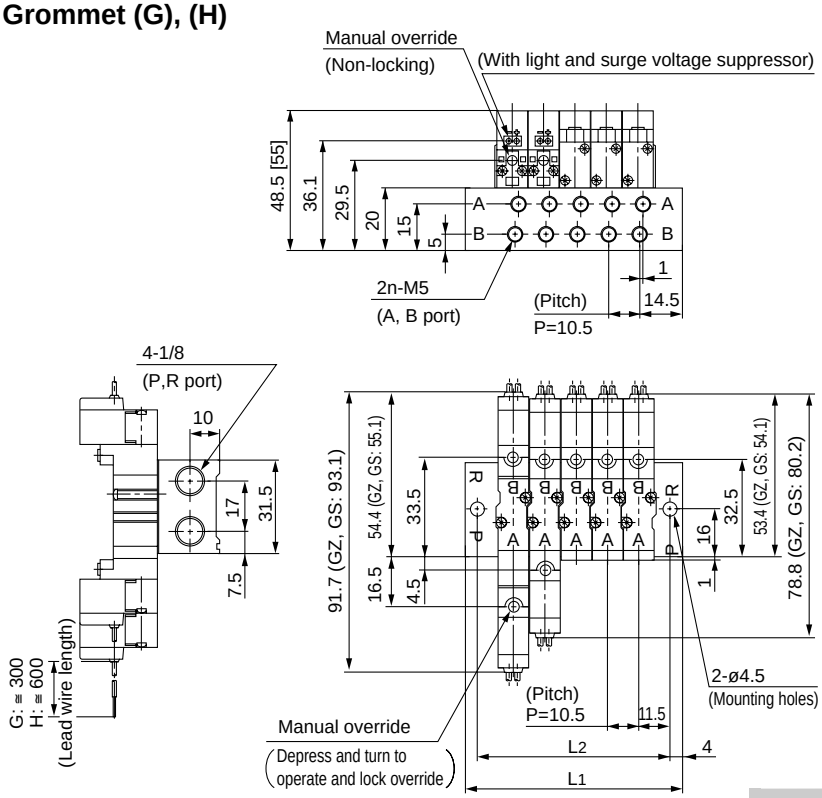

C4(Built-in One-touch fitting)

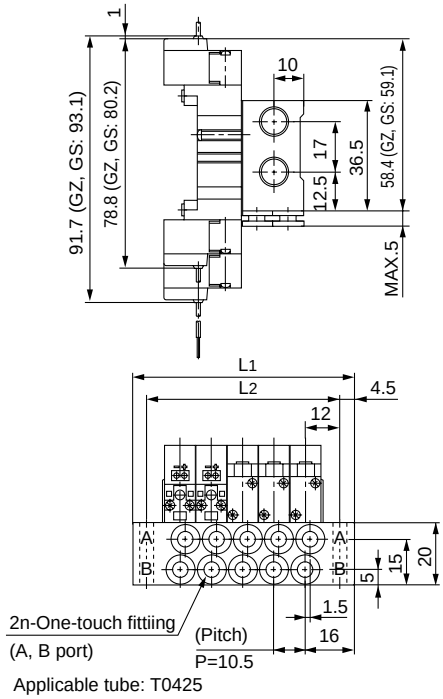

∗ Other dimensions are the same as the M5.

L plug connector (L)

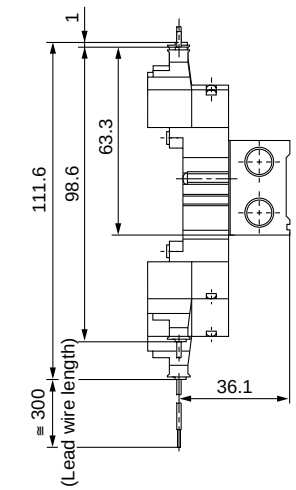

∗ Other dimensions are the same as the grommet style.

M plug connector (M)

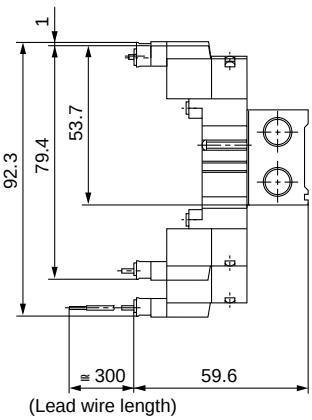

∗ Other dimensions are the same as the grommet style.

S32 Type/Side Ported (Single solenoid coil is located on same side as the A, B port.)

SS5YJ3-S32-Station-M5, C4□-Q

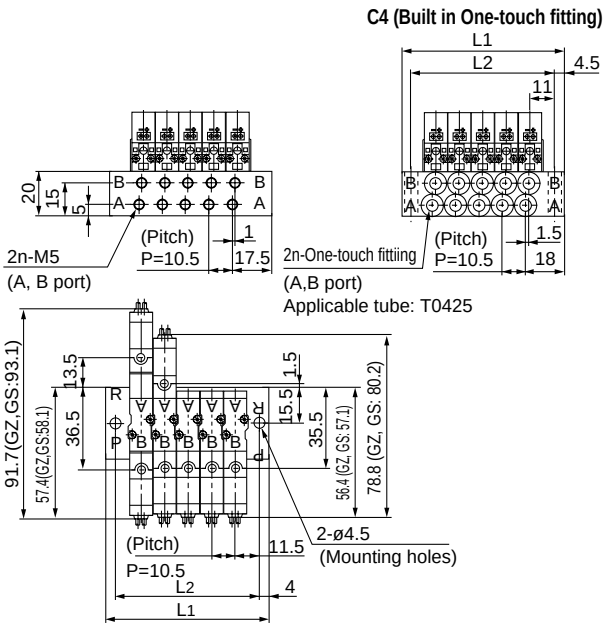

∗ Other dimensions are the same as the type 32.

SS5YJ3-32, S32-Station-M5□-Q

Stations	2	3	4	5	6	7	8	9	10	11	12	13	14	15	16	17	18	19	20
L1	41.5	52	62.5	73	83.5	94	104.5	115	125.5	136	146.5	157	167.5	178	188.5	199	209.5	220	230.5
L2	33.5	44	54.5	65	75.5	86	96.5	107	117.5	128	138.5	149	159.5	170	180.5	191	201.5	212	222.5

SS5YJ3-32, S32-Station-C4□-Q

Stations	2	3	4	5	6	7	8	9	10	11	12	13	14	15	16	17	18	19	20
L1	42.5	53	63.5	74	84.5	95	105.5	116	126.5	137	147.5	158	168.5	179	189.5	200	210.5	221	231.5
L2	33.5	44	54.5	65	75.5	86	96.5	107	117.5	128	138.5	149	159.5	170	180.5	191	201.5	212	222.5

41 Type Manifold: Side Ported/SS5YJ3-41-Station-M5, C4□-Q

Grommet (G), (H)

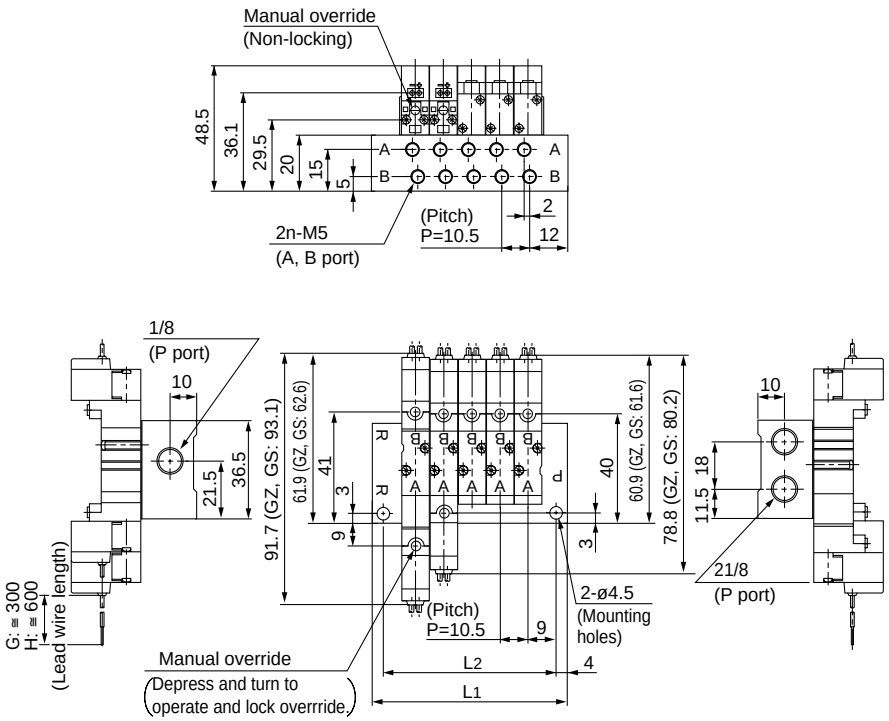

C4 (Built-in One-touch fitting)

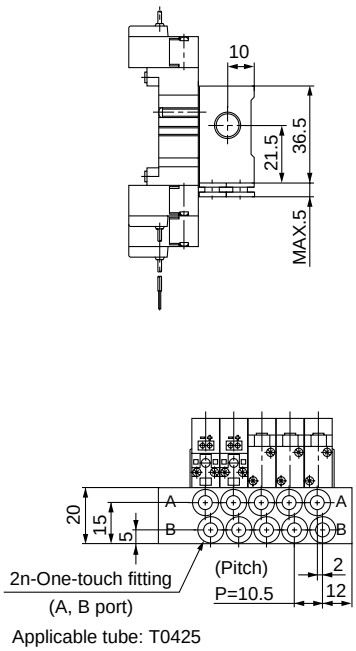

∗ Other dimensions are the same as the M5.

L plug connector (L)

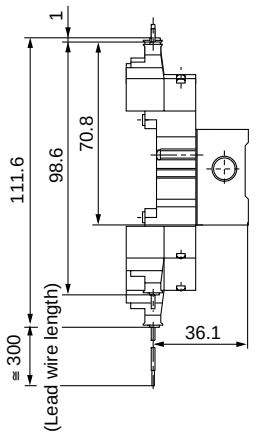

∗ Other dimensions are the same as the grommet style.

M plug connector (M)

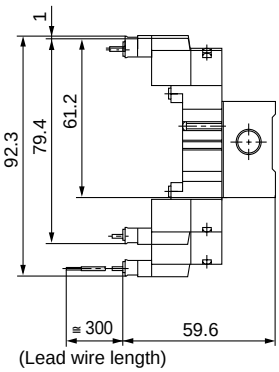

∗ Other dimensions are the same as the grommet style.

S41 Type/Side Ported (Single solenoid coil is located on same side as the A, B port.)

SS5YJ3-S41-Station-M5, C4□-Q

C4 (Built-in one-touch fitting)

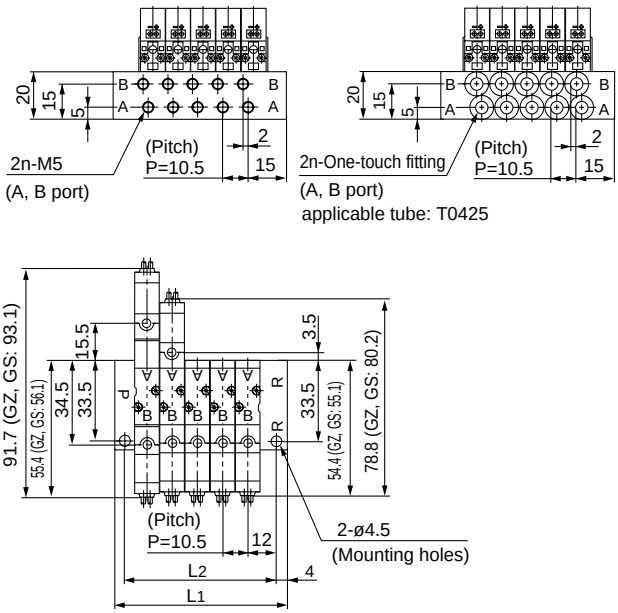

∗ Other dimensions are the same as type 41.

Stations	2	3	4	5	6	7	8	9	10	11	12	13	14	15	16	17	18	19	20
L1	39.5	50	60.5	71	81.5	92	102.5	113	123.5	134	144.5	155	165.5	176	186.5	197	207.5	218	228.5
L2	31.5	42	52.5	63	73.5	84	94.5	105	115.5	126	136.5	147	157.5	168	178.5	189	199.5	210	220.5

46 Type Manifold: Side Ported/SS5YJ3-46-Station-M5, C4 □-Q

Grommet (G), (H)

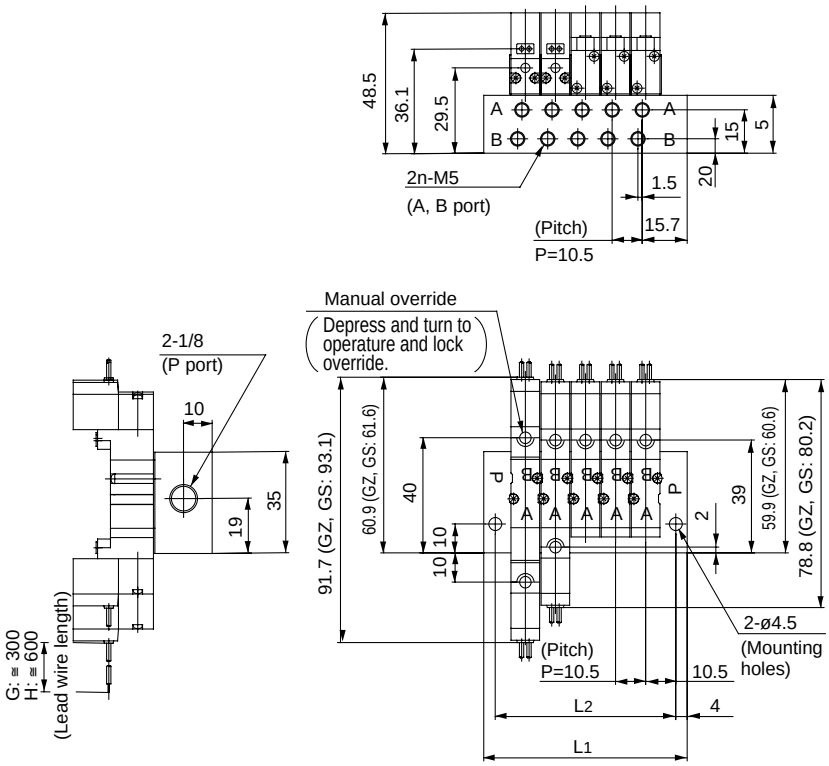

C4 (Built-in One-touch fitting)

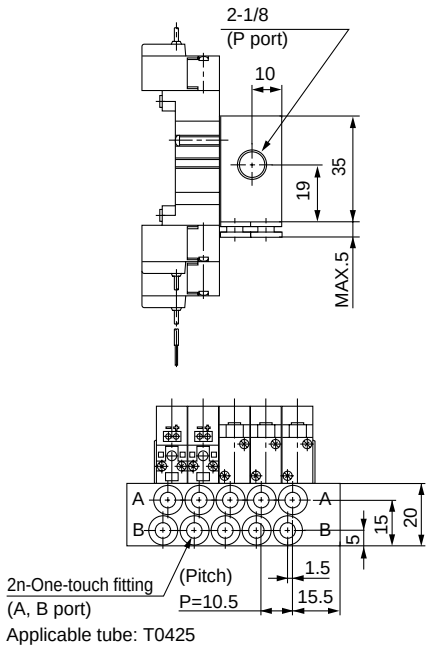

∗ Other dimensions are the same as the M5.

L plug connector (L)

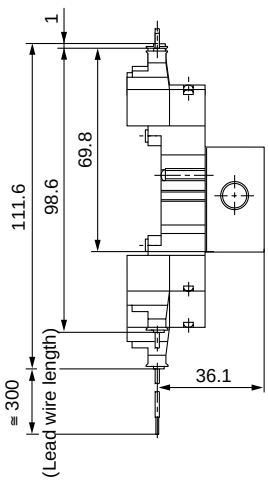

∗ Other dimensions are the same as the grommet style.

M plug connector (M)

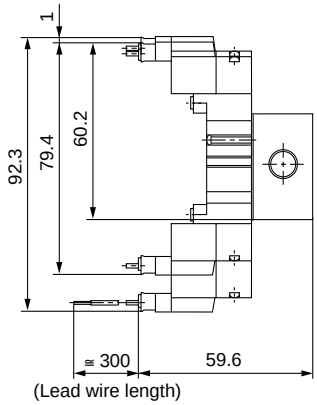

∗ Other dimensions are the same as the grommet style.

S46 Type/Side Ported (Single solenoid coil is located on same side as the A, B port.)

SS5YJ3-S46-Station-M5, C4 □-Q

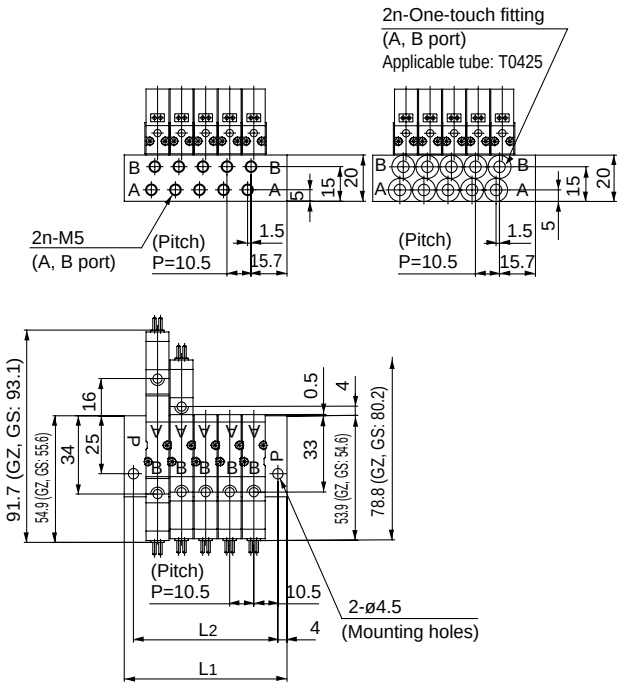

∗ Other dimensions are the same as type 46.

Stations	2	3	4	5	6	7	8	9	10	11	12	13	14	15	16	17	18	19	20
L_1	39.5	50	60.5	71	81.5	92	102.5	113	123.5	134	144.5	155	165.5	176	186.5	197	207.5	218	228.5
L_2	31.5	42	52.5	63	73.5	84	94.5	105	115.5	126	136.5	147	157.5	168	178.5	189	199.5	210	220.5

Flat Cable Manifold

SS5YJ3-21P-Station □-Q

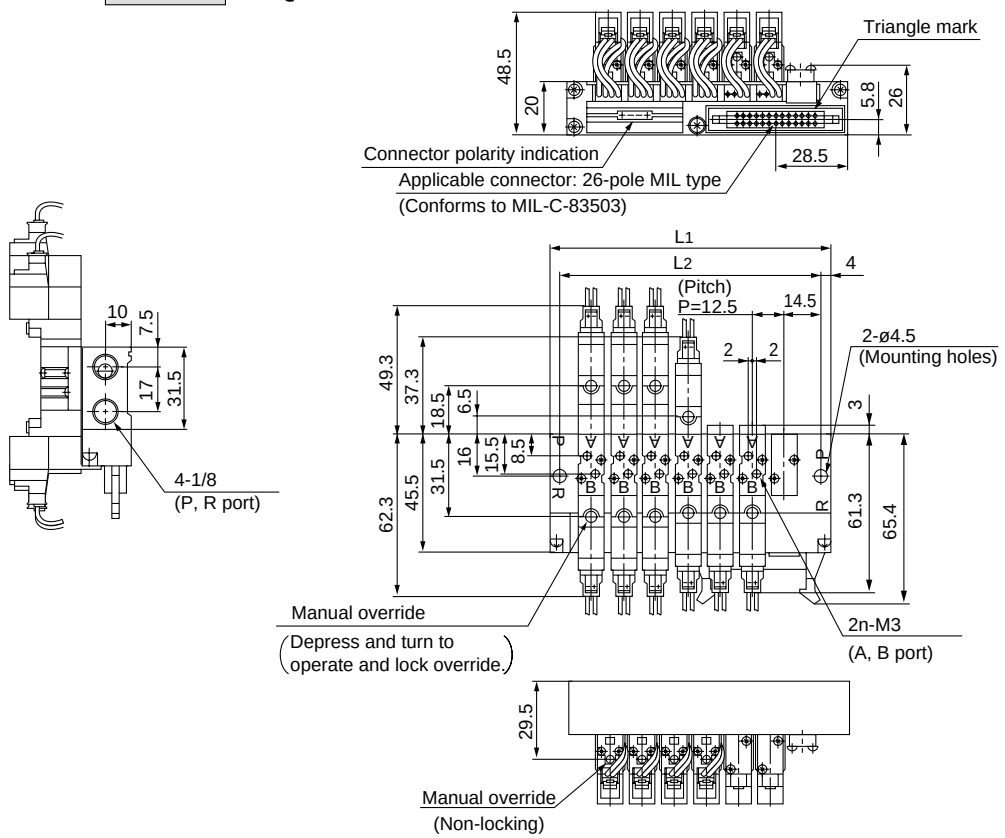

SS5YJ3-32P-□□-M5, C4□-Q

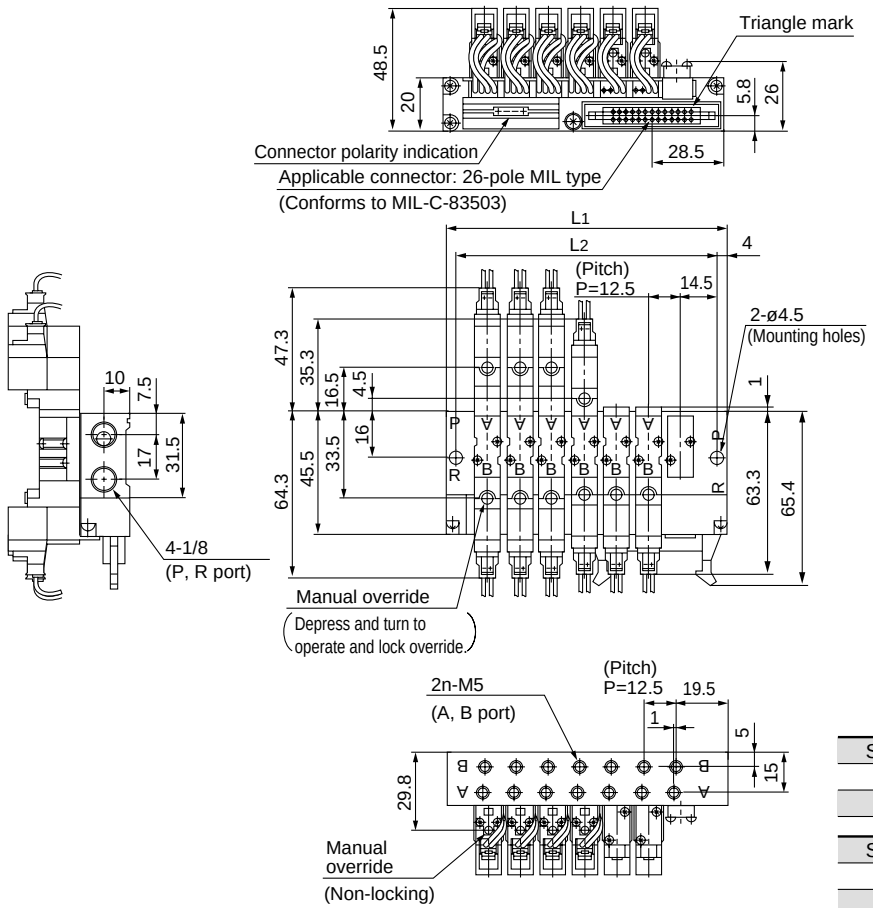

C4(Built-in One-touch fitting)

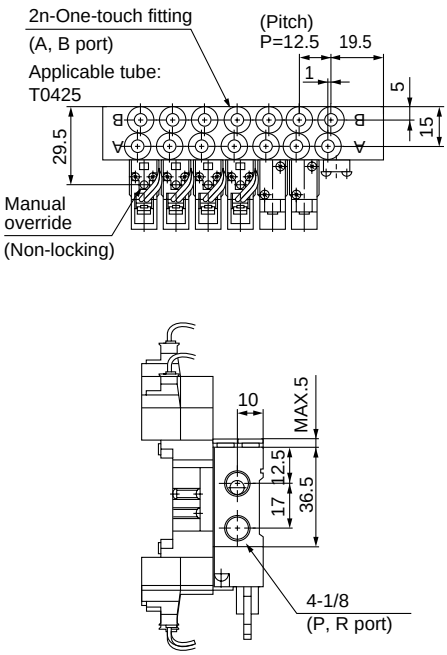

Stations	4	5	6	7	8
L_1	72.5	85	97.5	110	122.5
L_2	64.5	77	89.5	102	114.5

Stations	9	10	11	12
L_1	135	147.5	160	172.5
L_2	127	139.5	152	164.5

5 Port Solenoid Valve
Rubber Seal
Series SYJ5000

Body ported

Base mounted

Model

Valve model		Configruration		Port size	Effective area mm² (Nℓ/min) (1)	Weight (g) (2) Grommet	Weight (g) (2) L/M plug connector
Body ported	SYJ5□20-□-M5-Q	2 position	Single	M5	3.6 (196.30)	43	45
			Double		3.6 (196.30)	58	62
		3 position	Closed centre		3.2 (176.67)	69	73
			Exhaust centre		3.6 (196.3) [2.7 (147.23)]		
			Pressure centre		P→A,B: 4.0(215.93) [2.7 (147.23)] A, B→R1, R2: 3.4 (186.49)		
	SYJ5□20-□-C4-Q	2 position	Single	A, B port : C4 (ø4 One-touch fitting) P, R port : M5	3 (166.86)	50	52
			Double		3 (166.86)	65	69
		3 position	Closed centre		3 (166.86)	76	80
			Exhaust centre		3 (166.86) [2.4 (127.60)]		
			Pressure centre		P→A, B: 3.5(186.49) [2.9 (157.04)] A, B→R1, R2: 3.1(166.86)		
	SYJ5□20-□-C6-Q	2 position	Single	A, B port : C6 (ø6 One-touch fitting) P, R port : M5	3.5 (186.49)	50	52
			Double		3.5 (186.49)	65	69
		3 position	Closed centre		3.2(176.67)	76	80
			Exhaust centre		3.2 (176.67) [2.4 (127.60)]		
			Pressure centre		P→A, B: 3.8 (206.12) [3.0 (166.86)] A, B→R1, R2: 3.2 (176.67)		
Base mounted	SYJ5□40-□-01-□-Q	2 position	Single	1/8	4.5 (245.38)	77 (43)	79 (45)
			Double		4.5 (245.38)	92 (58)	96 (62)
		3 position	Closed centre		3.4 (186.49)	103 (69)	107 (73)
			Exhaust centre		4.5 (245.38) [2.7 (147.23)]		
			Pressure centre		P→A, B: 5.3 (245.38) [3.1 (166.86)] A, B→R1, R2: 4.0 (215.93)		

Note 1) [ ] for normal position. Exhaust centre: A, B→R1 ,R2 Pressure centre: P→A, B
Note 2) ( ): Without sub-plate.

JIS Symbol

Body ported
2 position single

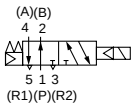

Base mounted (with sub-plate)
2 position single

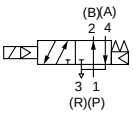

2 position double

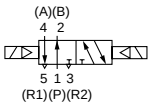

2 position double

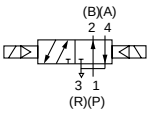

3 position closed centre

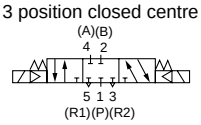

3 position closed centre

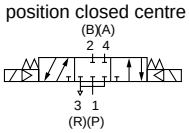

3 position exhaust centre

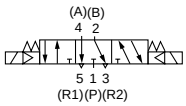

3 position exhaust centre

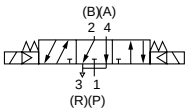

3 position pressure centre

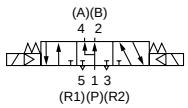

3 position pressure centre

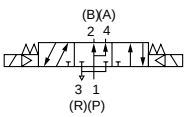

Order Made P.1.3-72

Specifications

Fluid		Air
Operating pressure range (MPa)	2 position single	0.15 to 0.7
	2 position double	0.1 to 0.7
	3 position	0.15 to 0.7
Ambient and fluid temperature °C		Max. 50
Response time (ms) (4) at 0.5MPa	2 position single,double	≤ 25
	3 position	≤ 40
Max. operating frequency (Hz)	2 position single,double	5
	3 posittion	3
Manual override		Non-locking push, Push-turn-locking slotted style
Pilot exhaust		Individual pilot exhaust, Common exhaust (pilot and main valve)
Lubrication		Not required
Mounting position		Free
Impact/Vibration resistance (m/s²) (5)		150/30
Protection structure		Dust proof

Note 4) According to dynamic performance test JIS B8375-1981 (Coil temperature 20°C, at rated voltage, without surge voltage suppressor)
Note 5) Impact resistance: No malfunction resulted from the impact test using a drop impact tester. The test was performed on the axis and right angle direction of the main valve and armature, for both energized andde-energized states. (Value in the initial stage)
Vibration resistance: No malfunction occurred in a one-sweep test between 8.3 and 2000Hz. Test was performedat both energized and de-energized states to axis and right angle direction of the main valve and armature. (Value in the initial stage)

Solenoid Specifications

Electric entry		Grommet (G)/(H), L plug connector (L), M plug connector (M)
Coil rated voltage (V)	DC	24, 12, 6, 5, 3
Allowable voltage		±10% rated voltage
Power consumption (W)(6)		0.5 (With light: 0.55)
Surge voltage suppressor	DC	Diode
Indicator light		LED

Note 6) At rated voltages

Cylinder Maximum Operating Speed

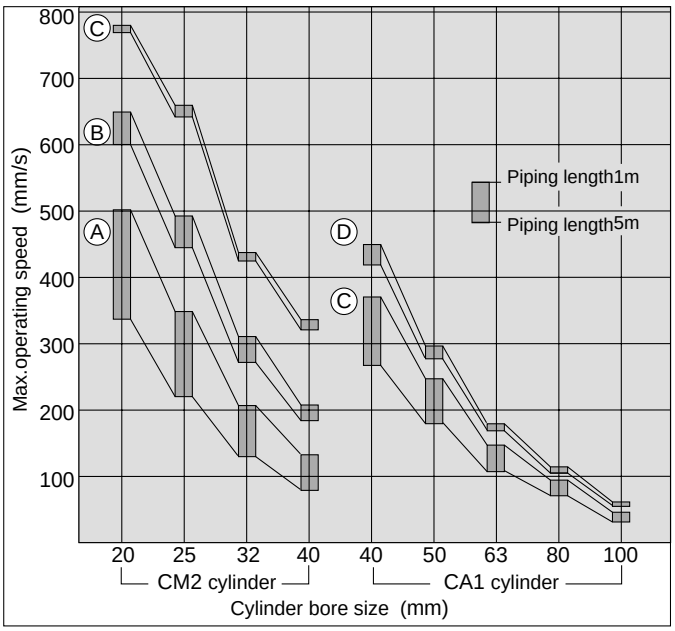

●System Figure

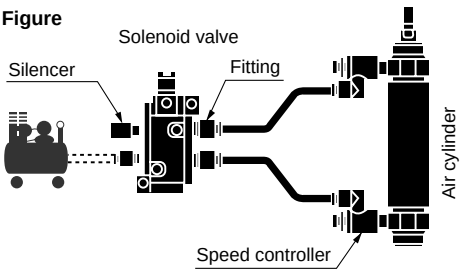

Operating conditions: Pressure 0.5MPa, Load rate 50%
At cylinder extended, cylinder stroke CM2: 300mm
CA1: 500mm

System components

System	Solenoid valve	Speed controller	Silencer	Fitting (Tube O.D. X Port size)
A	SYJ5□40-01 Rc(PT)1/8 (S = 4.5mm²)	AS2301F01-04	AN110-01 (S = 35mm²)	ø4 X 1/8
B		AS2301F01-06		ø6 X 1/8
C		AS3301F 02/03-06		
D		AS3301F 02/03-08		ø8 X 1/8

Built-in Speed Controller Style

SYJ5□5□

- Built-in exhaust flow controls enable simple cylinder speed adjustments.
- When mounted on the manifold, the common exhaust discharges the pilot and main valve exhaust through a common exhaust port to enable simple exhausting.

JIS Symbol

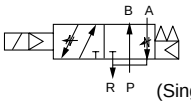

(Single)

How to order valve with built-in speed controller

SYJ5□5□-□□□□-□-Q

- Config.
- Body option
- Rated voltage
- Electrical entry
- Light and surge voltage suppressor
- Manual override
- Port size

Flow control specifications($^{A}_{B}$→R)

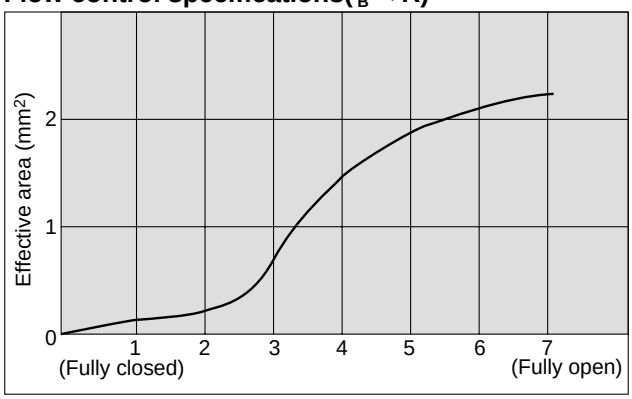

Note) ●When using SYJ5□53 model the speed controller must be opened more than 1 complete rotation from fully closed in order to function properly.
●Adjust the speed controller with a torque of 0.3Nm or less.

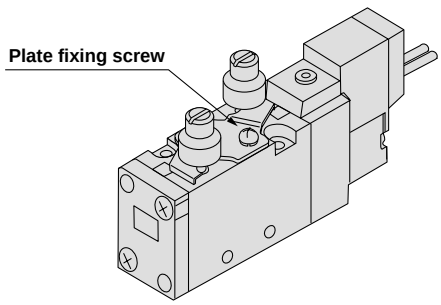

Note) Do not loosen plate fixing screw.

How to Order

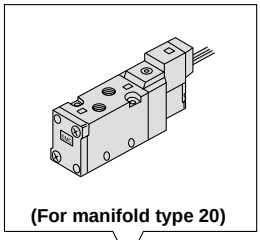

(For manifold type 20)

Body ported SYJ5 1 2 0 — 5 L □ □ — M5 — □ -Q

Base mounted SYJ5 2 4 0 — 5 L □ □ — □ □ -Q

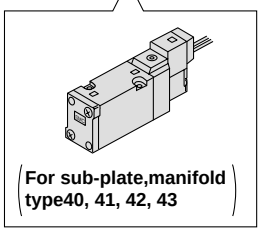

(For sub-plate,manifold type40, 41, 42, 43)

Configuration

1	2 position single solenoid
2	2 position double solenoid
3	3 position closed centre
4	3 position exhaust centre
5	3 position pressure centre

Rated voltage

For DC

5	24V DC
6	12V DC
V	6V DC
S	5V DC
R	3V DC
9	(Less than 50VDC)

Light and surge voltage suppressor

For electrical entry G,H,L and M

—	Without light and surge suppressor
S	With surge suppressor
Z	With light and surge suppressor
U	With light and surge suppressor (Non-polar)

A, B port size

M5	M5
C4	ø4 One-touch fitting
C6	ø6 One-touch fitting

Bracket

—: Without bracket
F : With bracket

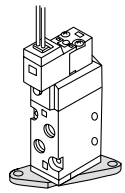

Note) · The double solenoid mounting bracket is supplied unattached.

Body option

0: Individual exhaust for the pilot valve

3: Common exhaust for the pilot and main valves

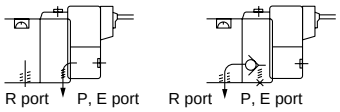

Manual override

—: Non-loking push style

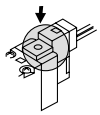

D: Push-turn-locking slotted style

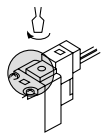

Thread

-	Rc(PT)
F	G(PF)
N	NPT
T	NPTF

Port size

—: Without sub-plate

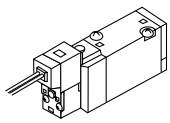

(With gasket and screws)

01: With 1/8 sub-plate

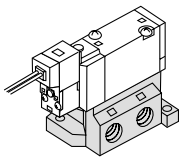

Electrical entry

24V, 12V, 6V, 5V, 3V DC			
Grommet	L plug connector	M plug connector	
G: 300mm lead wire	L: 300mm lead wire	M: 300mm lead wire	MN: Without lead wire
H: 600mm lead wire	LN: Without lead wire	LO: Without connector	MO: Without connector

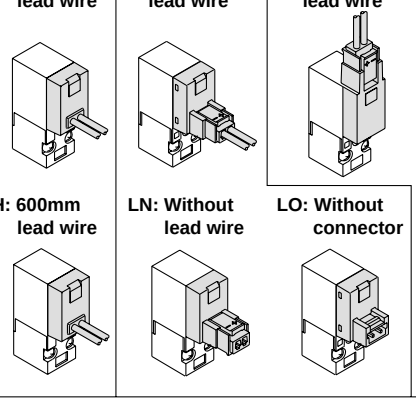

∗LN and MN types are with 2 pcs. of socket.

Protective class class III (Mark: ⦶)

Order Made Contact SMC for other voltages (9)

Construction

2 position single

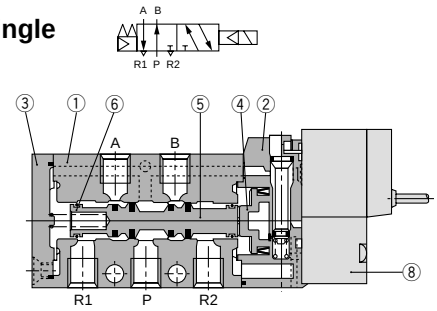

2 position double

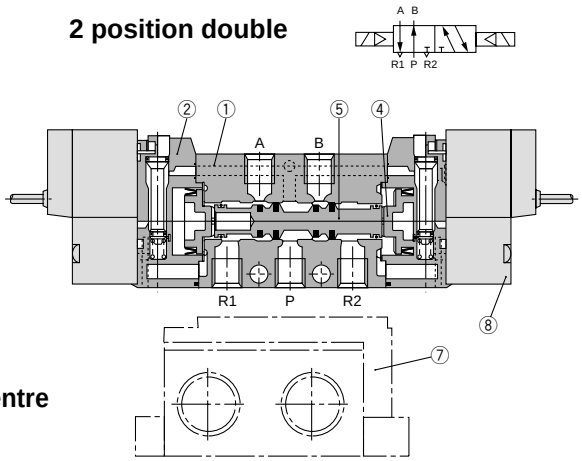

3 position closed centre/exhaust centre/pressure centre

3 position closed centre

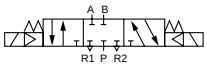

3 position exhaust centre

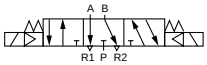

3 position pressure centre

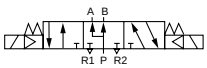

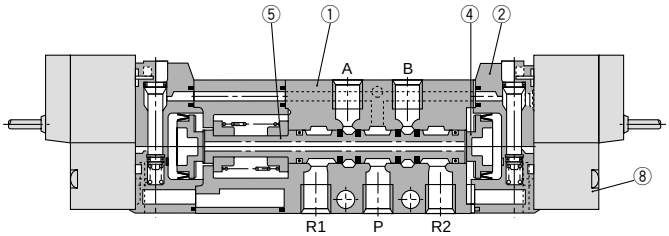

(This construction shows a closed centre)

Component Parts

No.	Description	Material	Note
①	Body	Aluminum die cast	White
②	Piston plate	Resin	White
③	End cover	Resin	White
④	Piston	Reain	—
⑤	Spool ass´y	—	—
⑥	Spool spring	SUS	—

Replacement Parts

No.	Description	Part No.	Note
⑦	Sub-plate	SYJ5000-22-1-Q	Aluminum die cast
⑧	Pilot valve	SY114-□□□-Q	

How to Order Pilot Valve Assembly

SY114 — 5 G □ -Q

Voltage

5	24V DC
6	12V DC
V	6V DC
S	5V DC
R	3V DC

Electrical entry

G	Grommet (Lead wire length: 300mm)	
H	Grommet (Lead wire length: 600mm)	
L	L plug connector	With lead wire
LN		Without lead wire
LO		Without connector
M	M plug connector	With lead wire
MN		Without lead wire
MO		Without connector

Light and surge voltage suppressor

For electrical entry G,H,L and M

—	Without light and surge suppressor
S	With surge suppressor
Z	With light and surge suppressor
U	With light and surge suppressor (Non-polar)

How to Order Connector Assembly

DC : SY100-30-4A- □

Lead wire length

—	300mm
6	600mm
10	1000mm
15	1500mm
20	2000mm
25	2500mm
30	3000mm
50	5000mm

2 Position Single

Grommet (G), (H): SYJ5120-□$^{G}_{H}$□□-M5-Q

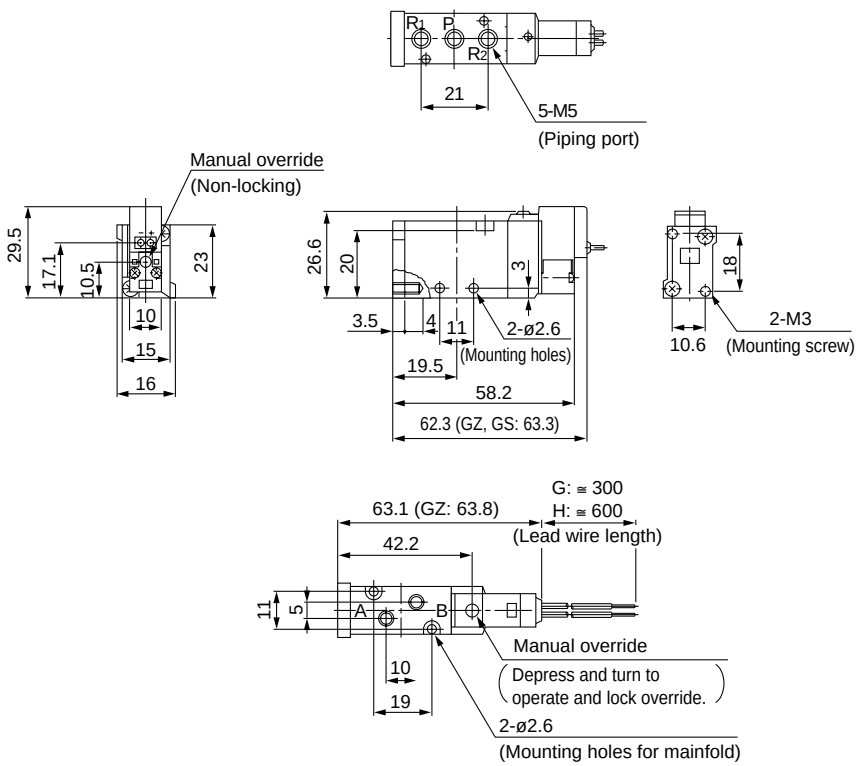

With bracket

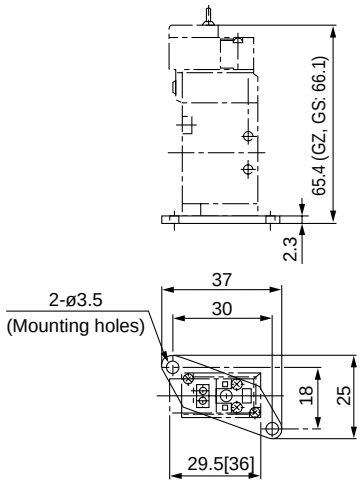

Built-in One-touch fitting: SYJ5120-□$^{G}_{H}$□□-$^{C4}_{C6}$-Q

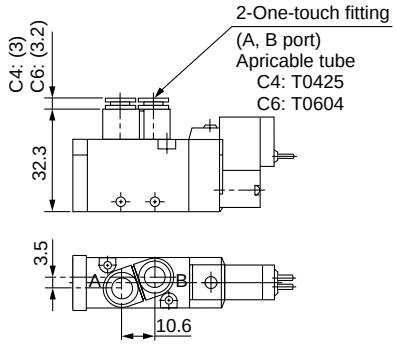

∗ Other dimensions are the same as the grommet style.

L plug connector (L): SYJ5120-□L□□-M 5-Q

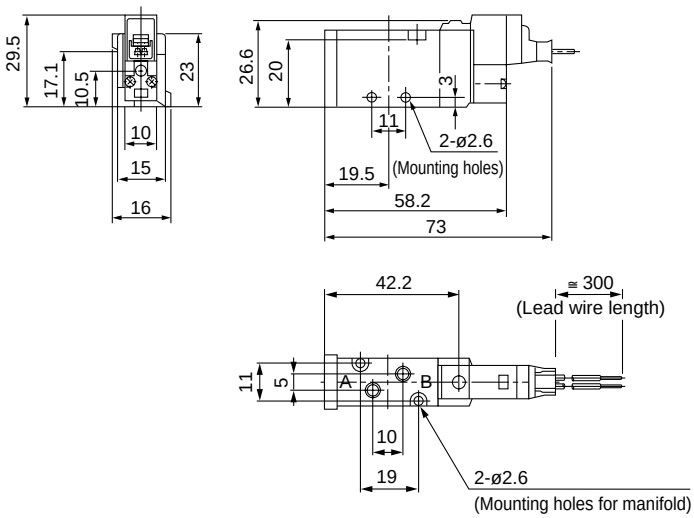

∗ Other dimensions are the same as the grommet style.

M plug connector (M): SYJ5120-□M□□-M 5-Q

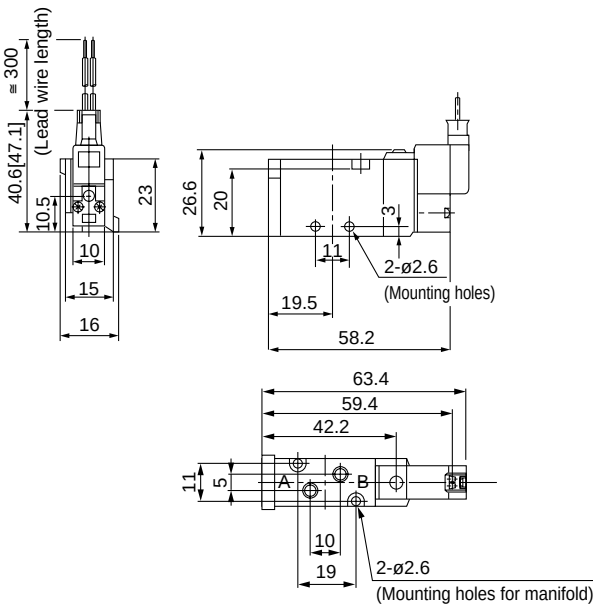

∗ Other dimensions are the same as the grommet style.

2 Position Double

Grommet (G), (H): SYJ5220-□$^{G}_{H}$□□-M 5-Q

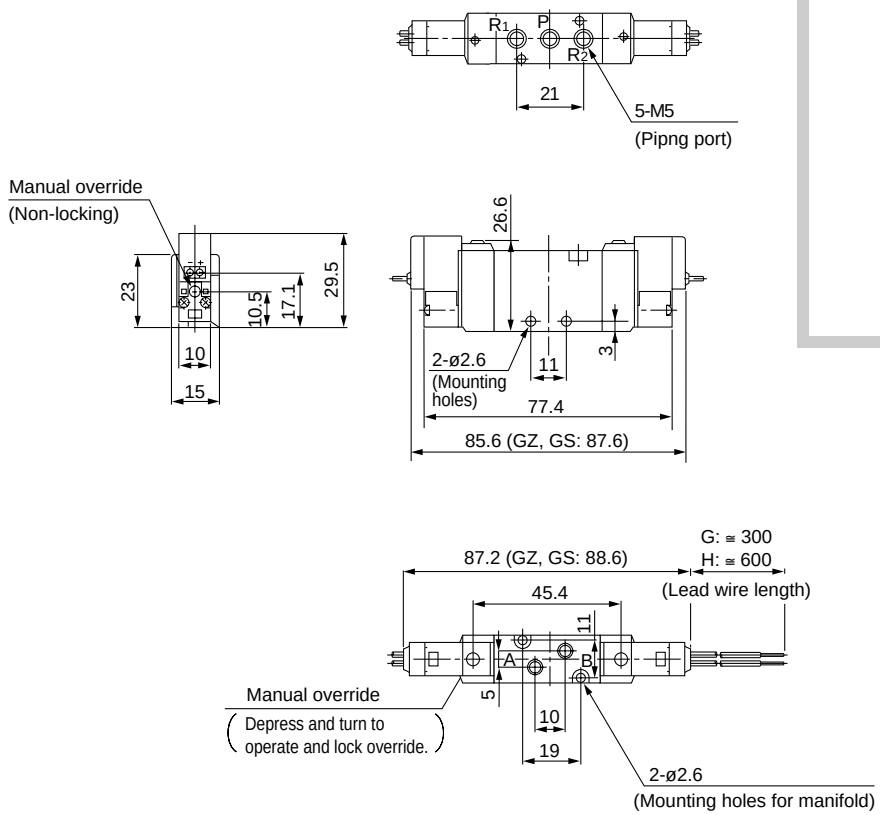

Built-in One-touch fitting: SYJ5220-□$^{G}_{H}$□□-$^{C4}_{C6}$-Q

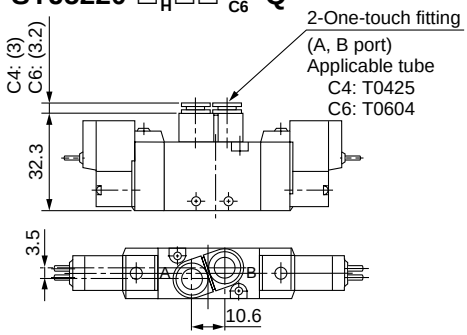

L pulg connector (L): SYJ5220- □L□□-M 5-Q

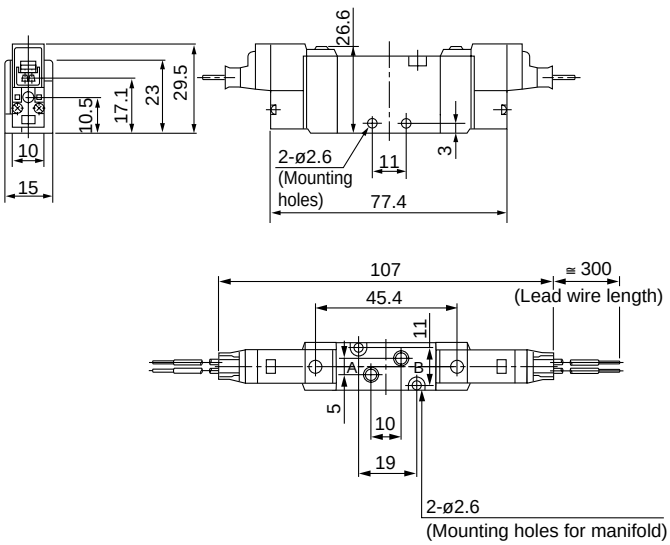

M plug connector (M): SYJ5220-□M□□-M 5-Q

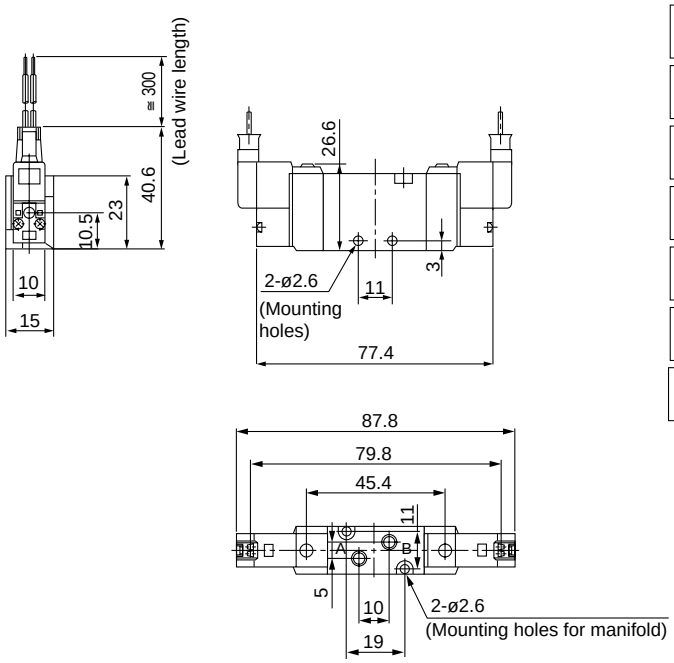

∗ Other dimensions are the same as the grommet style.

∗ Other dimensions are the same as the grommet style.

3 Position Closed Centre/Exhaust Centre/Pressure Centre

Grommet (G), (H): SYJ5$^{3}_{4}_{5}$20-□$^{G}_{H}$□□-M 5-Q

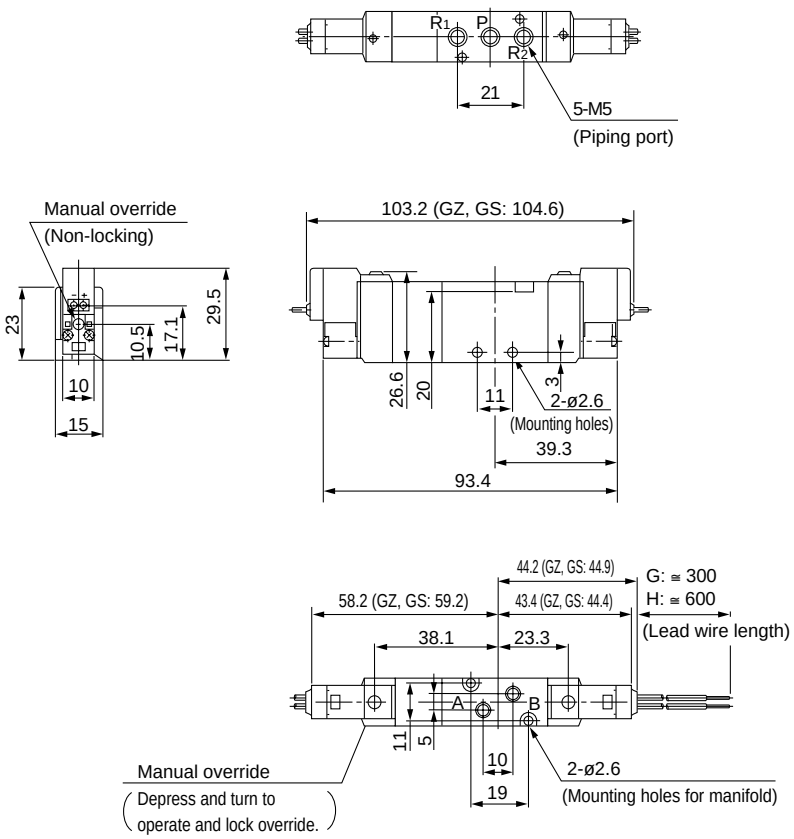

Built-in One-touch fitting: SYJ5$^{3}_{4}_{5}$20-□$^{G}_{H}$□□-$^{C4}_{C6}$-Q

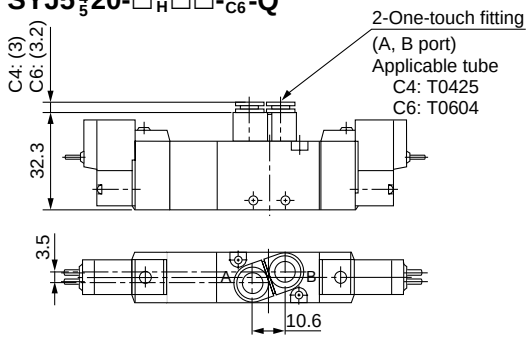

L plug connector (L): SYJ5$^{3}_{4}_{5}$20- □L□□-M 5-Q

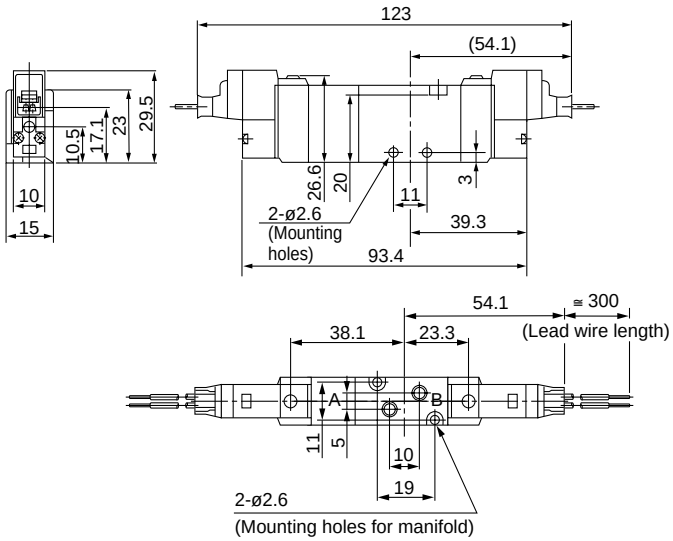

∗ Other dimensions are the same as the grommet style.

M plug connector (M): SYJ5$^{3}_{4}_{5}$20- □M□□-M5-Q

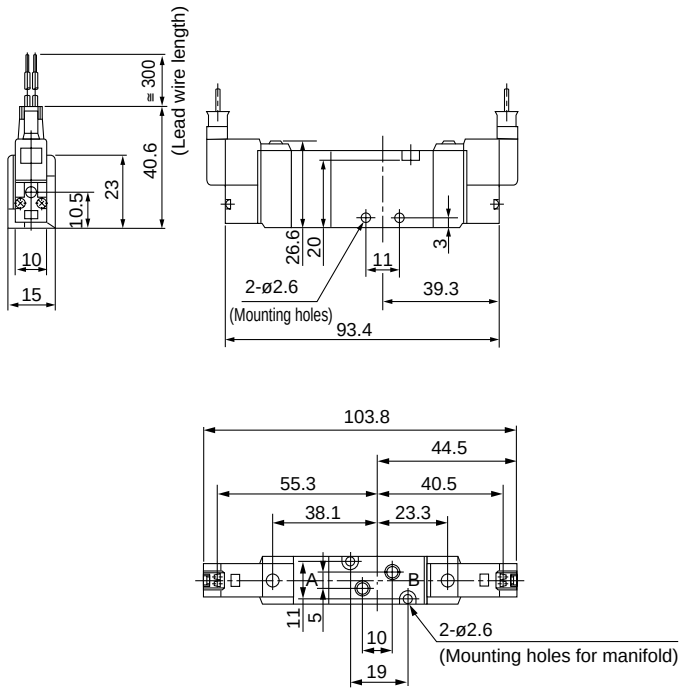

∗ Other dimensions are the same as the grommet style.

2 Position Single

Grommet (G), (H): SYJ5140-□$^{G}_{H}$□□-01□-Q

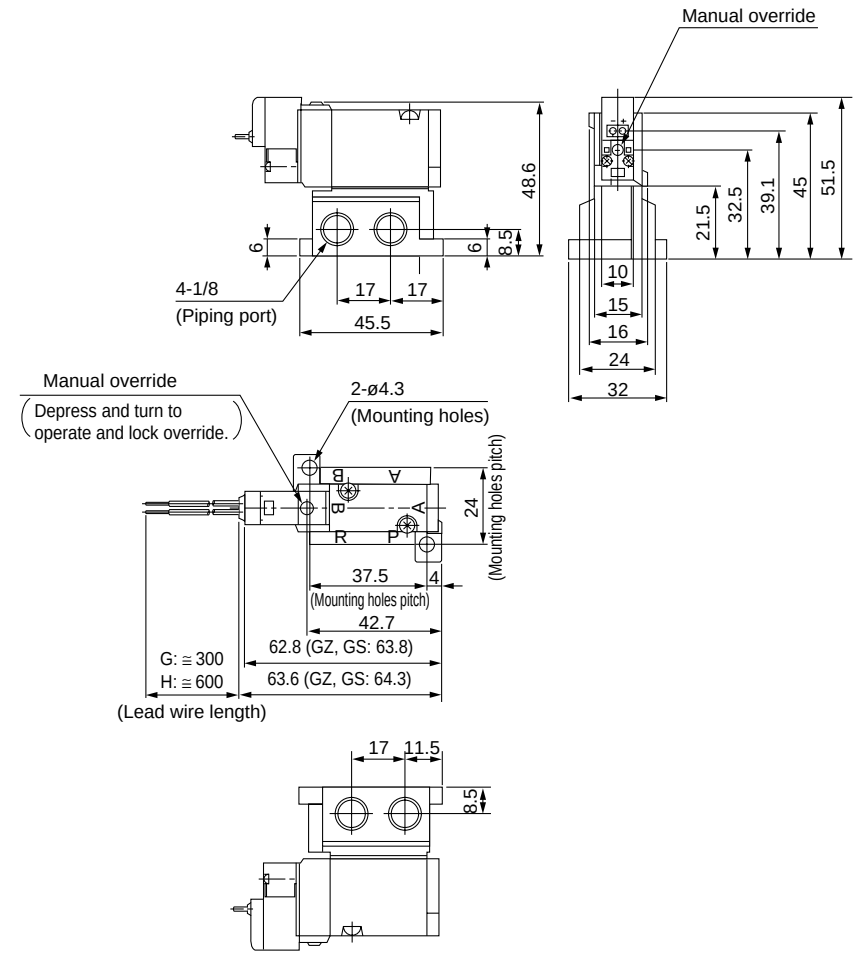

Built-in speed controller SYJ5150-□$^{G}_{H}$ □□-01□-Q

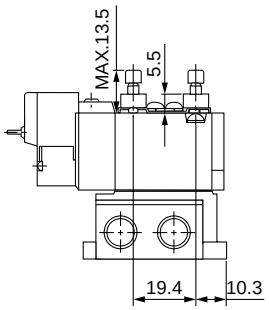

L plug connector (L): SYJ5140-□L□□-01□-Q

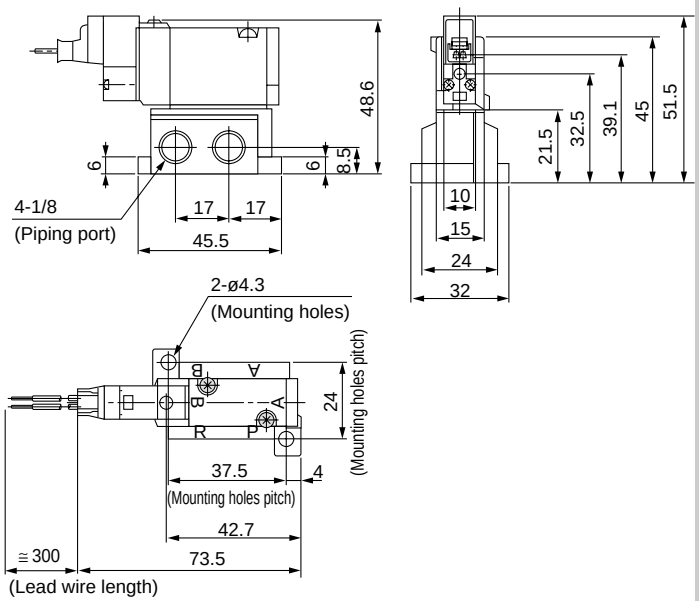

∗ Other dimensions are the same as the grommet style.

M plug connector (M): SYJ5140-□M□□-01□-Q

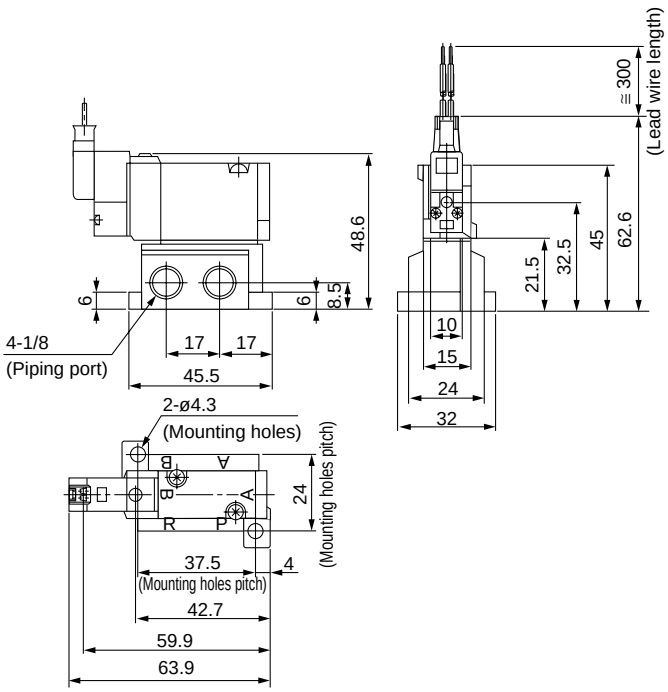

∗ Other dimensions are the same as the grommet style.

2 Position Double

Grommet (G), (H): SYJ5240-□$^{G}_{H}$□□-01□ -Q

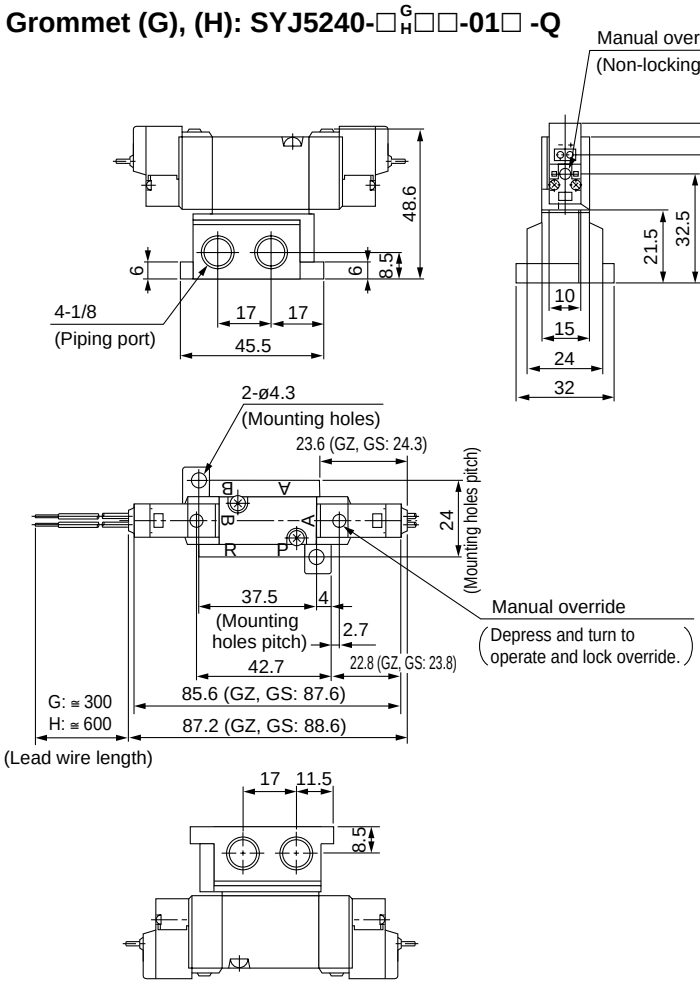

Built-in speed controller SYJ5250-□$^{G}_{H}$□□-01□-Q

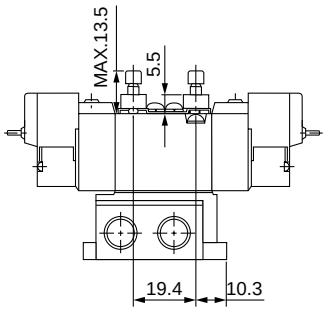

L plug connector (L): SYJ5240-□L□□-01□ -Q

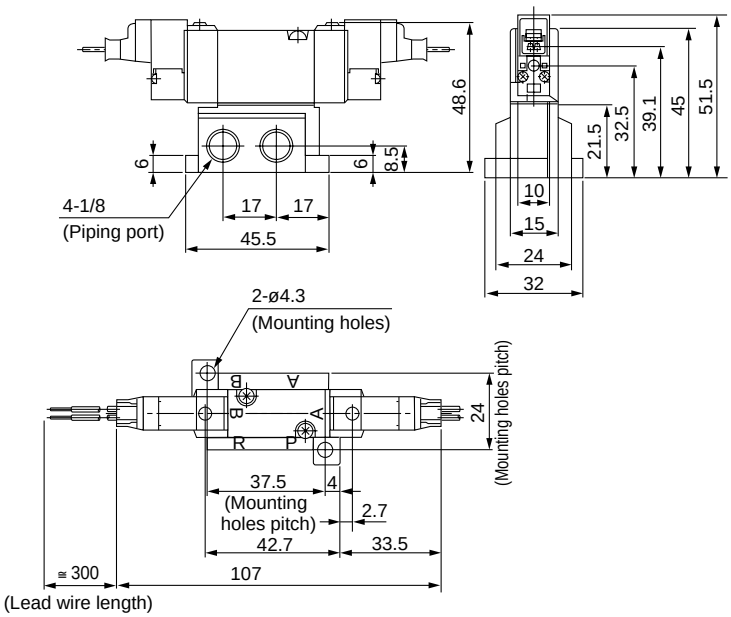

∗ Other dimensions are the same as the grommet style.

M plug connector (M): SYJ5240-□M□□-01□ -Q

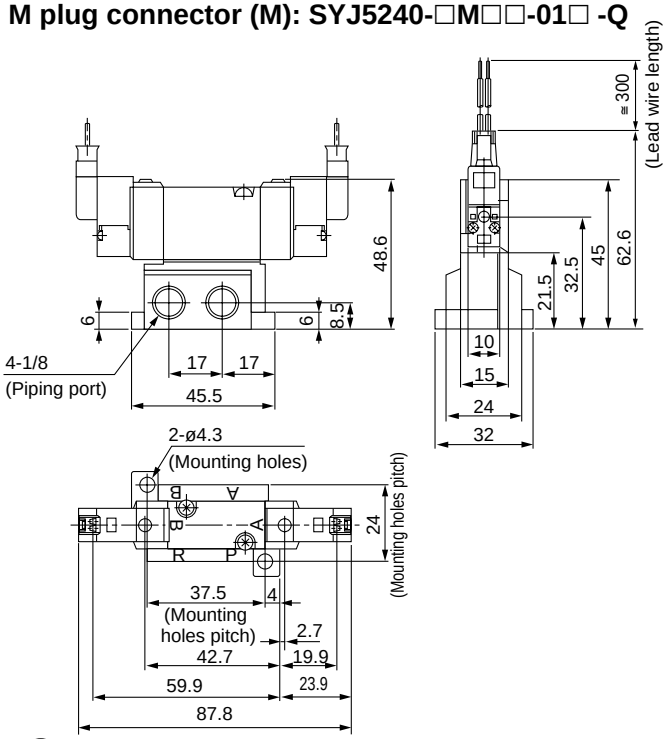

∗ Other dimensions are the same as the grommet style.

3 Position Closed Center/Exhaust Center/Pressure Center

Grommet (G), (H): SYJ5 $^{3}_{4}_{5}$40-□$^{G}_{H}$□□-01□ -Q

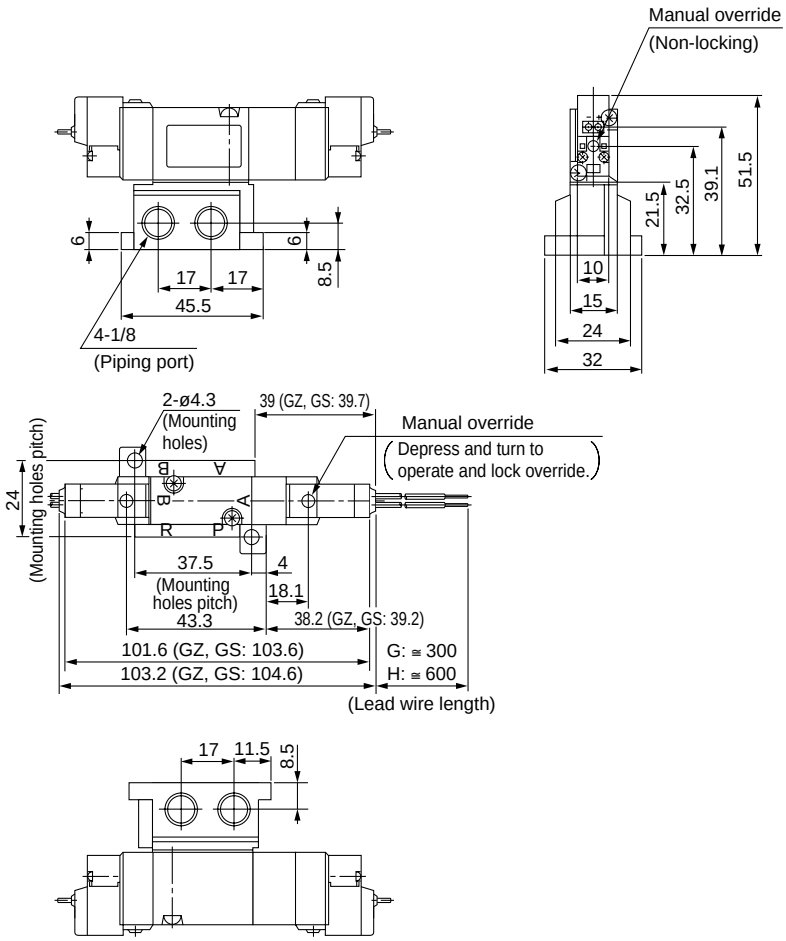

Built-in speed controller SYJ5 $^{3}_{4}_{5}$50-□$^{G}_{H}$□□-01□ -Q

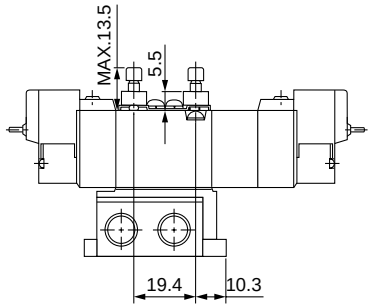

L plug connector (L): SYJ5 $^{3}_{4}_{5}$40-□L□□-01□ -Q

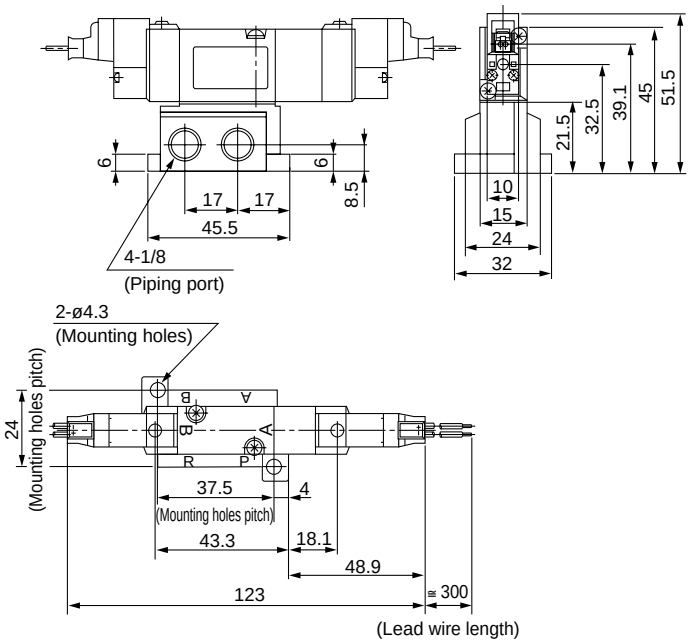

∗ Other dimensions are the same as the grommet style.

M plug connector (M): SYJ5 $^{3}_{4}_{5}$40-□M□□-01□ -Q

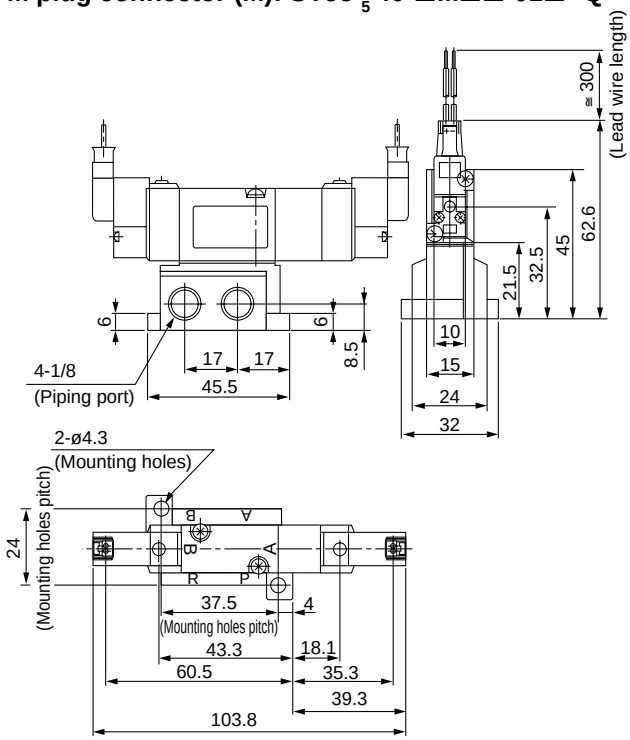

∗ Other dimensions are the same as the grommet style.

Manifold

Standard

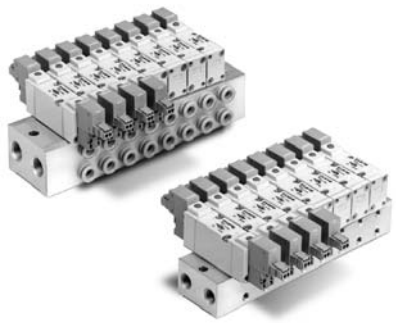

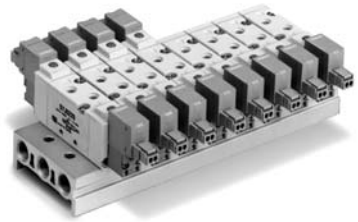

Manifold Specifications

Type		20	40	41	42	43
Manifold style		Single base style/B mount				
P (SUP), R (EXH) style		Common SUP, Common EXH				
Valve stations		2 to 20 stations				
A, B port specifications	Location	Valve	Base	Base		
	Direction	Top	Bottom	Side		
Port size	P, R port	1/8			1/4	1/8
	A, B port	M5 C4 C6	M5 X 0.8		1/8, C6 (ø6 One-touch fitting)	C4 (ø4 One-touch fitting)
Valve effective area mm²(Nℓ/min) (1)	Body ported **SYJ5□2□**	M5: 3.4 (186.49) C4: 3 (166.86) C6: 3.4 (186.49)	—	—	—	—
	Base mounted **SYJ5□4□**	—	3.0 (166.86)	2.9 (157.04)	3.8 (206.12)	3.2 (176.67)

Note 1) Value for a solenoid 2 position valve mounted on the manifold base.

How to Order Valve Manifold

Specify the part numbers for the valve(s), blank plate ass'y, and manifold base.

Example

●**SS5YJ5-20-03-Q** ·····	1 pc.	(Manifold base)
SYJ5120-5G-M5-Q ·····	2 pcs. (Valve)	
SYJ5000-21-1A-Q ·····	1 pc.	(Blank plate ass'y)
●**SS5YJ5-43-03-C4-Q** ·····	1 pc.	(Manifold base)
SYJ5140-5LZ-Q ·····	1 pc.	(Valve)
SYJ5240-5LZ-Q ·····	1 pc.	(Valve)
SYJ5000-21-1A-Q ·····	1 pc.	(Blank plate ass'y)

∗ Use manifold specification sheet.

Flat Cable Manifold

●Multiple valve wiring is simplified through the use of the flat cable connector.

●Clean appearance

With the flat cable manifold, each valve is wired to the manifold base.
A single MIL specification flat cable connects the entire manifold to the power source.
This greatly reduces installation time.

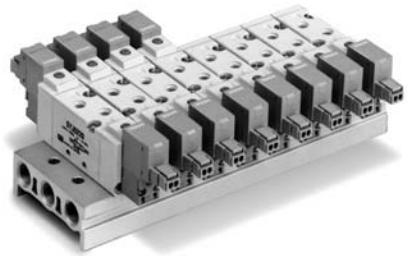

Flat Cable Manifold Specifications

Model		20P	41P	43P
Manifold style		Single base style/B mount		
P (SUP), R (EXH) style		Common SUP, Common EXH		
Valve stations		3 to 12 stations		
A, B port specifications	Location	Valve	Base	
	Direction	Top	Side	
Port size	P, R port	1/8	1/8	
	A, B port	M5 C4 (ø4 One-touch fitting) C6 (ø6 One-touch fitting)	M5	C4 (ø4 One-touch fitting)
Valve effective area mm²(Nℓ/min) (1)	Body ported **SYJ5□23**	M5: 3.4 (186.49) C4: 3 (166.86) C6: 3.4 (186.49)	—	—
	Base mounted **SYJ5□43**	—	2.9 (157.04)	3.2 (176.77)
Connector (2)		Socket: 26 poles MIL type with strain relief conforms to MIL-C-83503		
Internal wiring		Both for +COM and –COM		
Rated voltage		24V DC, 12V DC		

Note 1) Value fo single operation of 2 position valve mounted on manifold base.
Note 2) The withstand voltage specification for the wiring unit section conforms to JISC0704, Grade 1 or its equivalent.

How to Order Valve Manifold

Specify the part numbers for the valve(s), blank plate ass'y, and manifold base.

Example
●SS5YJ5-41P-07-C4-Q ·····1 pc.(Manifold base)
SYJ5143-5LOU-Q ·····3 pcs.(Valve)
SYJ5243-5LOU-Q ·····3 pcs.(Valve)
SYJ5000-21-3A-Q ·····1 pc.(Blank plate ass'y)
SY3000-37-3A ·····3 pcs. (Connector ass'y)
SY3000-37-4A ·····3 pcs. (Connector ass'y)

*Use manifold specifications sheet.

⚠Caution

The manifold can be wired for either positive or negative common because only non-polar valves are used.
The use of valves other than non polar types are not recommended. It may cause damage to the electrical circuit.

How to Order Valve

Rated voltage

5	24V DC
6	12V DC

DC SYJ5 1 (2/4) 3 — 5 LOU □ — □ -Q

Configuration

1	2 position single solenoid
2	2 position double solenoid
3	3 position closed centre
4	3 position exhaust centre
5	3 position pressure centre

A/B port size

—	Base mounted
M5	M5
C4	ø4 One-touch fitting
C6	ø6 One-touch fitting

Manual override

—	Non-locking push style
D	Push-turn-locking slotted style
E	Push-turn-looking knob style

Note) Flat cable style:
"U" type is for DC specification.
Contact SMC for other specifications.

How to Order Connector Ass'y

For 12V/24V DC

Single solenoid	SY3000-37-28A
Double solenoid 3 position	SY3000-37-29A
Single with interface ass'y	SY3000-37-40A
Double solenoid 3 position with inter face ass'y	SY3000-37-41A

⚠ Protective class
class III (Mark:◇)

Common SUP/Common EXH

Note) For more than 8 stations, supply air to both sides of "P" port and exhaust air from both "R" port.

20 Type (5 Port/Body ported)

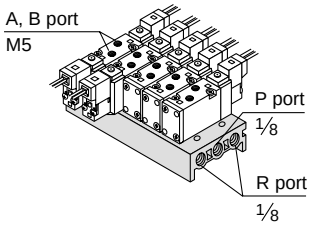

How to Order

SS5YJ5--20-- 05 [ ] -Q

Stations

02	2 stations
:	:
20	20 stations

Thread

-	Rc(PT)
00F	G(PF)
00N	NPT
00T	NPTF

Applicable solenoid valve

SYJ5□20-□□□□-M5-Q / C4-Q / C6-Q

SYJ5□23-□□□□-M5-Q / C4-Q / C6-Q

Applicable blank plate assembly

SYJ5000-21-1A-Q

Applicable individual exhaust spacer assembly

SYJ5000-17-1A-Q

40 Type (5 Port/Base mounted)

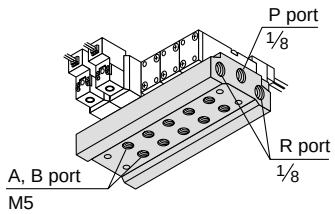

How to Order

SS5YJ5-- 40-- 05 -- M5 [ ] -Q

Stations

02	2 stations
:	:
20	20 stations

A, B port side

M5	M5

Thread

-	Rc(PT)
F	G(PF)
N	NPT
T	NPTF

Applicable solenoid valve

SYJ5□40-□□□□-Q

SYJ5□43-□□□□-Q

SYJ5□50-□□□□-Q

SYJ5□53-□□□□-Q

Applicable blank plate assembly

SYJ5000-21-1A-2-Q

Applicable individual exhaust spacer assembly

SYJ5000-17-1A-2-Q

Applicable interface regulator assembly

ARBYJ5000-00-P-Q

41 Type (5 Port/Base mounted)

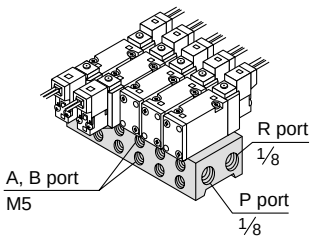

How to Order

SS5YJ5-- 41-- 05 --M5 [ ] -Q

Stations

02	2 stations
:	:
20	20 stations

A, B port side

M5	M5

Thread

-	Rc(PT)
F	G(PF)
N	NPT
T	NPTF

42 Type (5 Port/Base mounted)

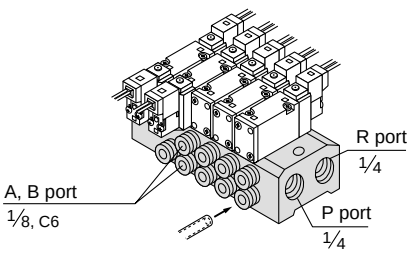

How to Order

SS5YJ5-- 42-- 05 -- C6 [ ] -Q

Stations

02	2 stations
:	:
20	20 stations

A, B port side

01	Rc(PT)1/8
C6	ø6 One-touch fitting

Thread

-	Rc(PT)
F	G(PF)
N	NPT
T	NPTF

Applicable solenoid valve

SYJ5□40-□□□□-Q

SYJ5□43-□□□□-Q

SYJ5□50-□□□□-Q

SYJ5□53-□□□□-Q

Applicable blank plate assembly

SYJ5000-21-1A-2-Q

Applicable individual exhaust spacer assembly

SYJ5000-17-1A-2-Q

Applicable individual supply spacer assembly

SYJ5000-16-2A-2Q

Applicable interface regulator assembly

ARBYJ5000-00-P-2Q

43 Type (5 Port/Base mounted)

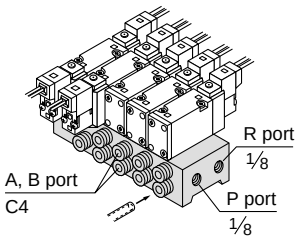

How to Order

SS5YJ5-- 43-- 05 -- C4 [ ] -Q

Stations

02	2 stations
:	:
20	20 stations

A, B port side

C4	ø4 One-touch fitting

Thread

-	Rc(PT)
F	G(PF)
N	NPT
T	NPTF

⚠ Protective class
class III (Mark:◈)

Flat Cable Manifold

Common SUP/Common EXH

Note) For more than 8 stations, supply air to both sides of "P" port and exhaust air from both sides of "R" port.

20P Type (5 Port/Body ported)

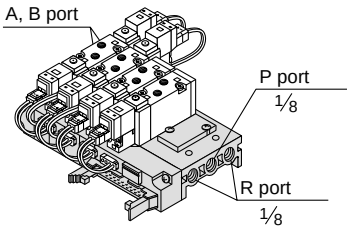

How to Order

SS5YJ5--20P--05 [ ] -Q

Stations

03	3 stations
:	:
12	12 stations

Thread

-	Rc(PT)
00F	G(PF)
00N	NPT
00T	NPTF

Applicable solenoid valve
Refer to the p.1.2-41.

Applicable blank plate assembly
SYJ5000-21-3A-Q

Applicable connector assembly
Refer to the p.1.3-41.

41P Type (5 Port/Base mounted)

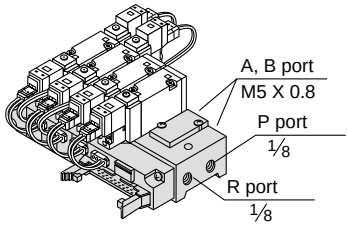

How to Order

SS5YJ5--41P--05--M5[ ] -Q

Stations

03	3 stations
:	:
12	12 stations

Thread

-	Rc(PT)
F	G(PF)
N	NPT
T	NPTF

Applicable solenoid valve
Refer to the p.1.3-41.

Applicable blank plate assembly
SYJ5000-21-3A-Q

Applicable connector assembly
Refer to the p.1.3-41.

43P Type (5 Port/Base mounted)

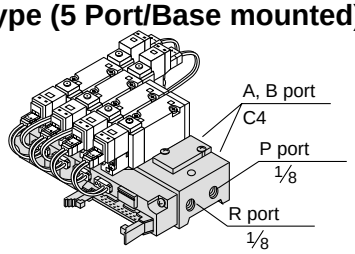

How to Order

SS5YJ5--43P--05--C4[ ] -Q

Stations

03	3 stations
:	:
12	12 stations

Thread

-	Rc(PT)
F	G(PF)
N	NPT
T	NPTF

Applicable solenoid valve
Refer to the p.1.3-41.

Applicable blank plate assembly
SYJ5000-21-3A-Q

Applicable connector assembly
Refer to the p.1.3-41.

Combinations of Solenoid Valve, Manifold Gasket and Manifold Base

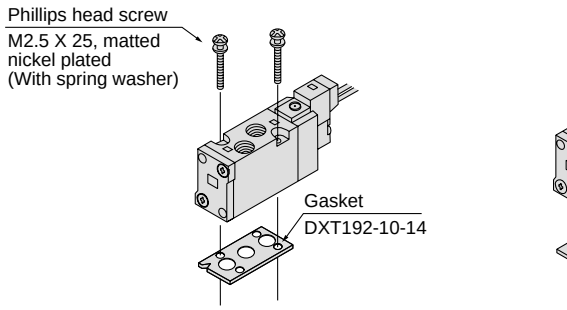

Applicable manifold base
SS5YJ5-20

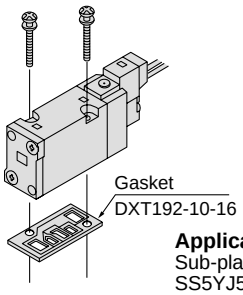

Applicable manifold base
Sub-plate
SS5YJ5-40
SS5YJ5-41
SS5YJ5-42
SS5YJ5-43

Blank Plate Assembly

SYJ5000-21-1A-1-Q

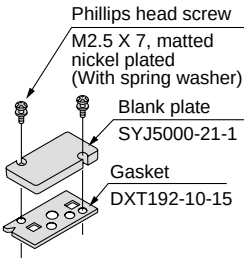

Applicable manifold base
SS5YJ5-20

SYJ5000-21-1A-2-Q

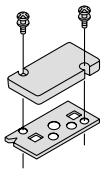

Applicable manifold base
SS5YJ5-40
SS5YJ5-41
SS5YJ5-42
SS5YJ5-43

SYJ5000-21-3A-1-Q

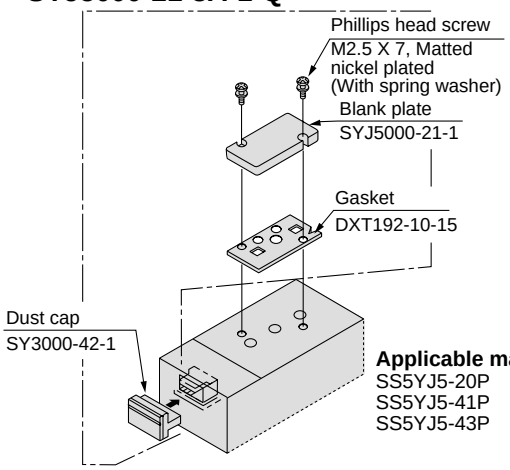

Applicable manifold base
SS5YJ5-20P
SS5YJ5-41P
SS5YJ5-43P

Installation of the SYJ500 Valve on the SYJ5000 Manifold

- Use of an adapter plate makes it possible to mount series SYJ500 on the manifold bases of series SYJ5000.
- When mounting the SYJ500 valve on the SYJ5000 manifold, the SYJ500 solenoid must be positioned on the same side of the manifold as a single solenoid SYJ5000. (See the figure below.)
- For base mounted style, the A port of the 3 port valve flows out the B port of manifold base.

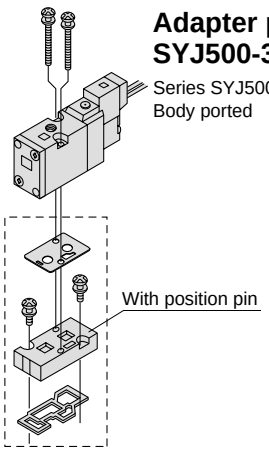

Adapter plate ass'y
SYJ500-3-1A-1-Q
Series SYJ500
Body ported

Applicable manifold base
SS5YJ5-20

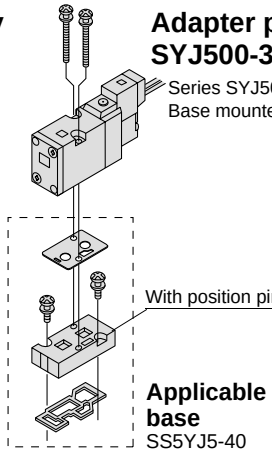

Adapter plate ass'y
SYJ500-3-1A-2-Q
Series SYJ500
Base mounted

Applicable manifold base
SS5YJ5-40
SS5YJ5-41
SS5YJ5-42
SS5YJ5-43

Interface Regulator (P regulation)

Putting interface regulator on the manifold base makes it possible to reduce supply pressure to a valve individually.

ARBYJ5000-00-P-Q

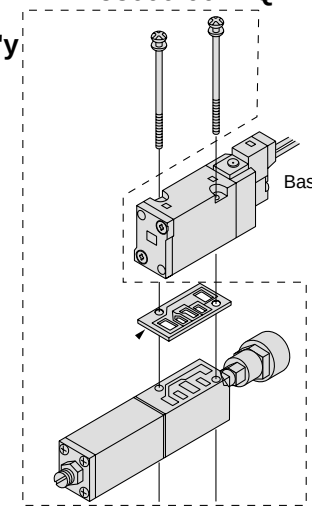

Applicable manifold base
SS5YJ5-40
SS5YJ5-41
SS5YJ5-42
SS5YJ5-43

Individual EXH Spacer Ass'y

SYJ5000-17-1A-1-Q

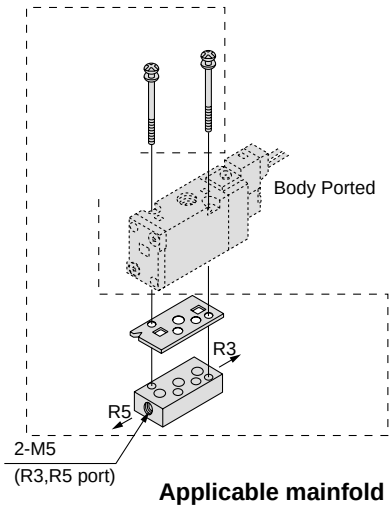

Applicable mainfold base
SS5YJ5-20

SYJ5000-17-1A-2-Q

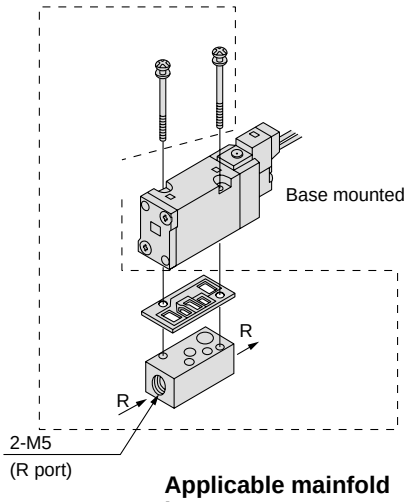

Applicable mainfold base
SS5YJ5-40
SS5YJ5-41
SS5YJ5-42
SS5YJ5-43

Individual SUP Spacer Ass'y

SYJ5000-16-2*A-Q

Thread	
-	Rc(PT)
F	G(PF)
N	NPT
T	NPTF

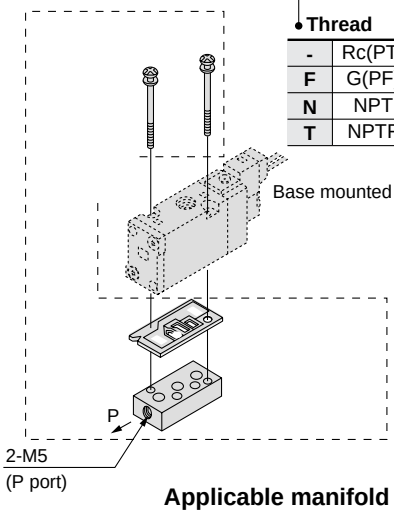

Applicable manifold base
SS5YJ5-41
SS5YJ5-42
SS5YJ5-43

20 Type Manifold: Top Ported/SS5YJ5-20-Station □-Q

Grommet (G), (H)

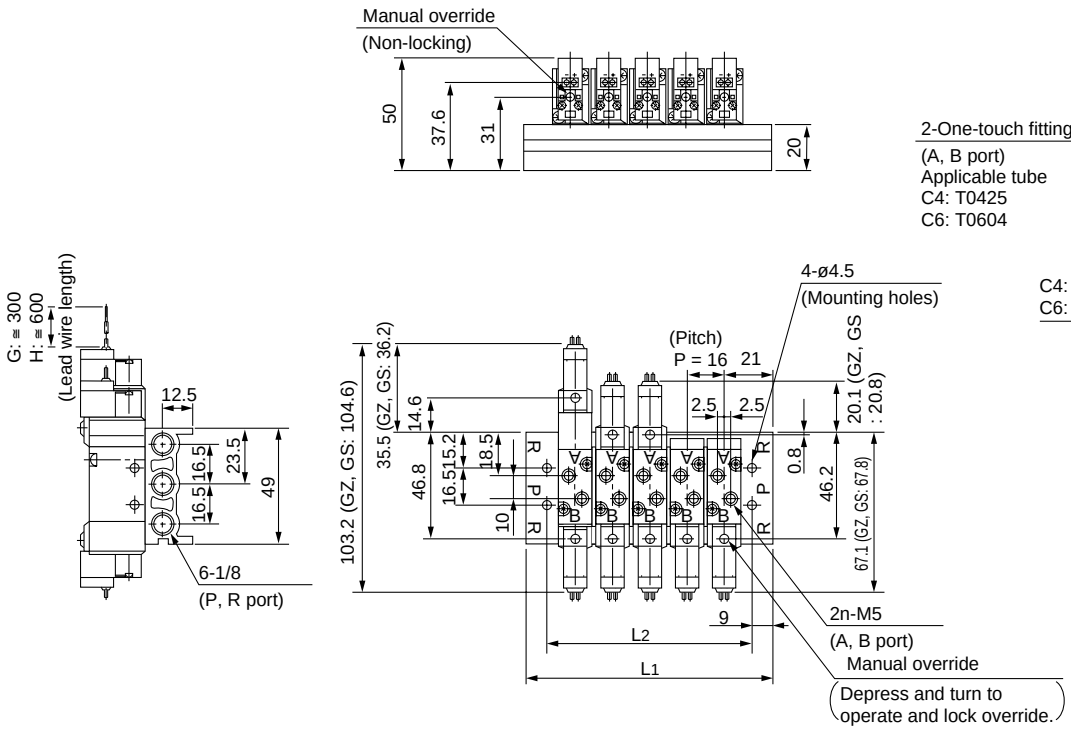

Built-in One-touch fitting

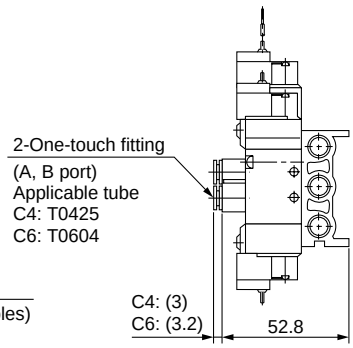

L plug connector (L)

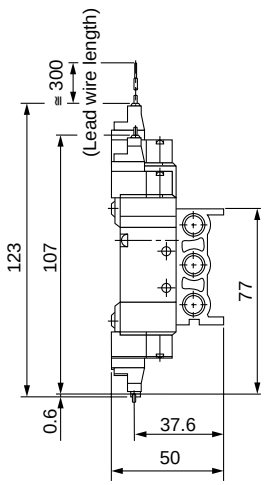

∗Other dimensions are the same as the grommet style.

M plug connector (M)

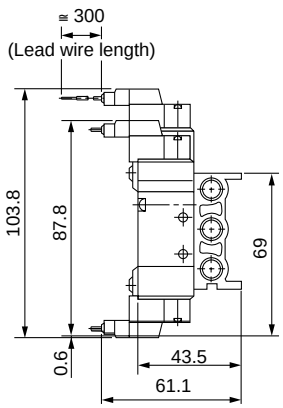

∗Other dimensions are the same as the grommet style.

Stations	2	3	4	5	6	7	8	9	10	11	12	13	14	15	16	17	18	19	20
L_1	58	74	90	106	122	138	154	170	186	202	218	234	250	266	282	298	314	330	346
L_2	40	56	72	88	104	120	136	152	168	184	200	216	232	248	264	280	296	312	328

40 Type Manifold: Bottom Ported/SS5YJ5-40-Station-M5□-Q

Grommet (G), (H)

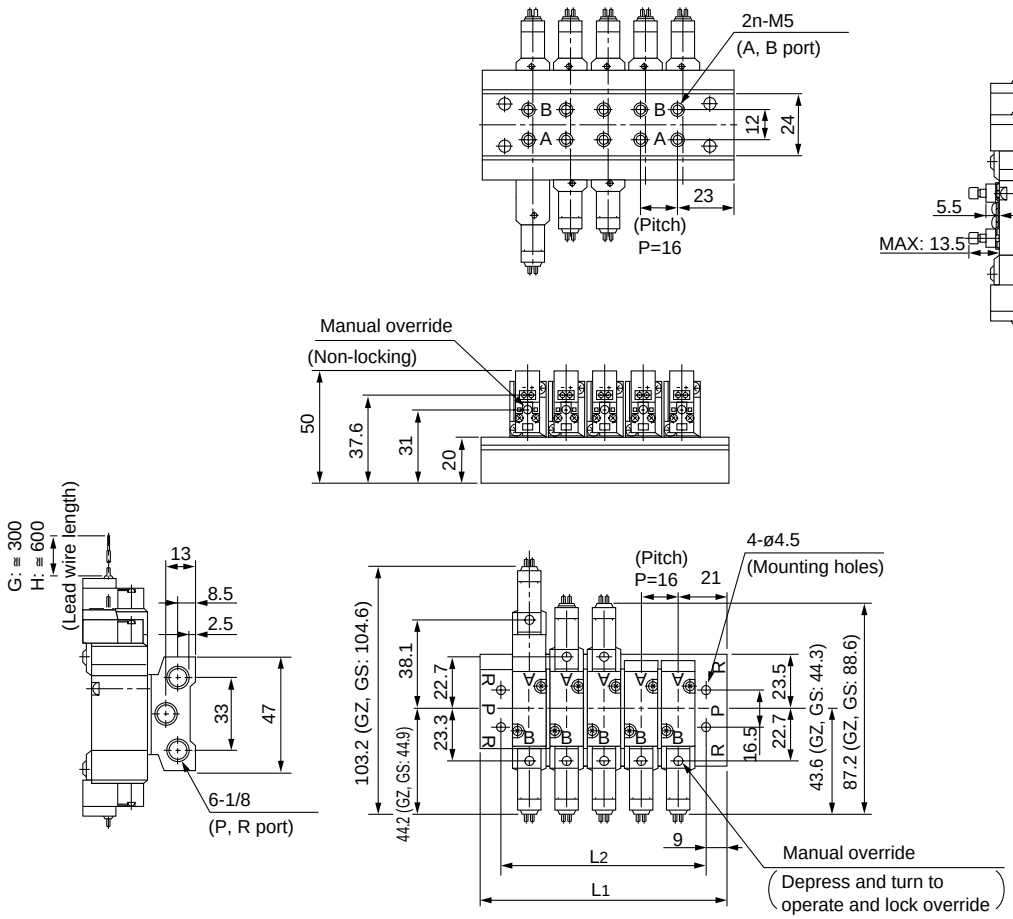

Built-in speed controller

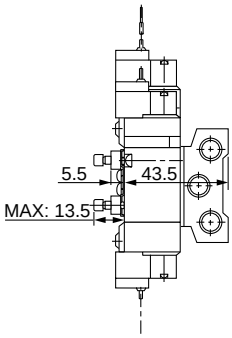

L plug connector (L)

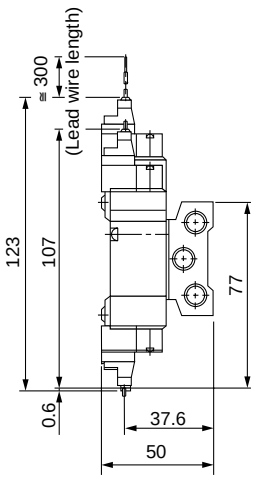

∗ Other dimensions are the same as the grommet style.

M plug connector (M)

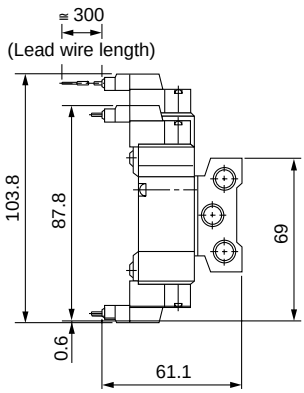

∗ Other dimensions are the same as the grommet style.

Stations	2	3	4	5	6	7	8	9	10	11	12	13	14	15	16	17	18	19	20
L_1	58	74	90	106	122	138	154	170	186	202	218	234	250	266	282	298	314	330	346
L_2	40	56	72	88	104	120	136	152	168	184	200	216	232	248	264	280	296	312	328

41 Type Manifold: Side Ported/SS5YJ5-41- Station -M5□ -Q

Grommet (G), (H)

Built-in speed controller

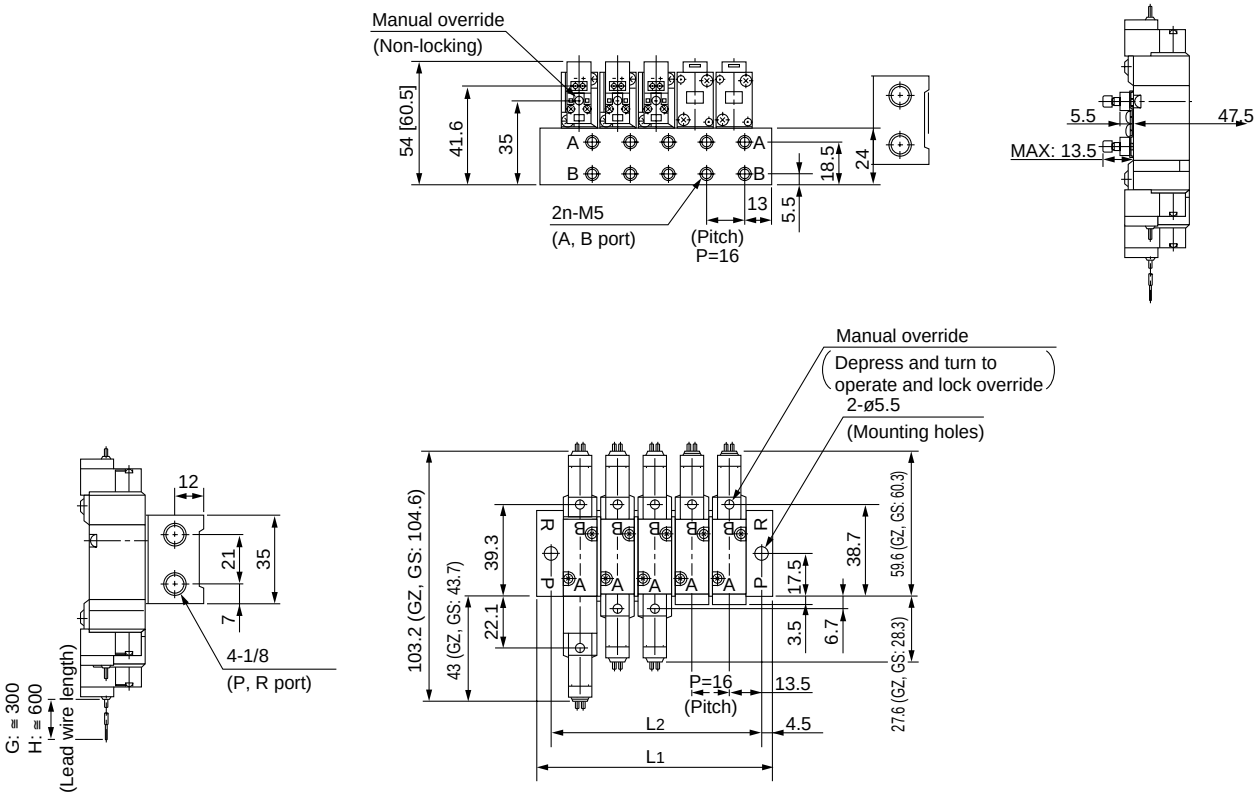

L plug connector (L)

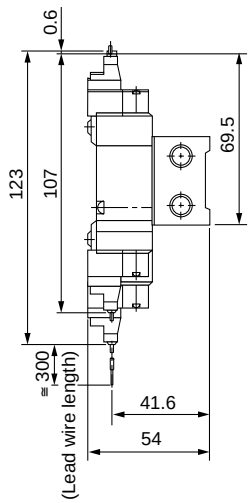

∗ Other dimensions are the same as the grommet style.

M plug connector (M)

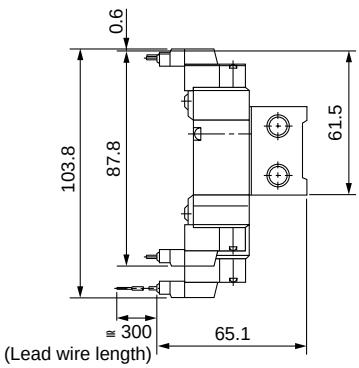

∗ Other dimensions are the same as the grommet style.

Stations	2	3	4	5	6	7	8	9	10	11	12	13	14	15	16	17	18	19	20
L1	52	68	84	100	116	132	148	164	180	196	212	228	244	260	276	292	308	324	340
L2	43	59	75	91	107	123	139	155	171	187	203	219	235	251	267	283	299	315	331

42 Type Manifold: Side Ported/SS5YJ5-42-Station-01,C6 □ -Q

Grommet (G), (H)

Built-in speed controller

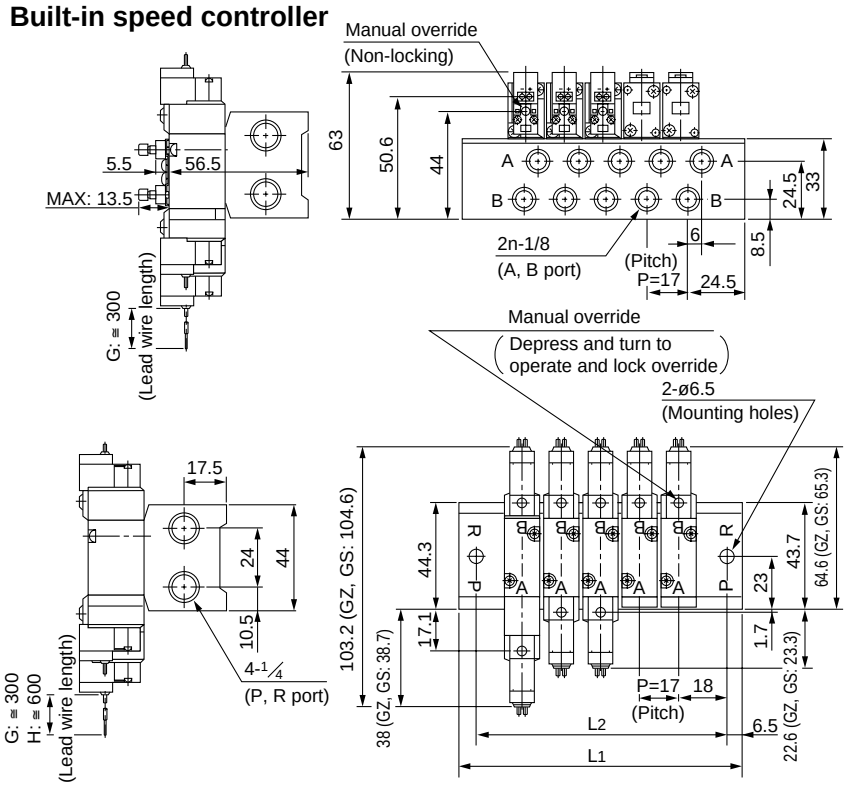

C6 (Built-in One-touch fitting)

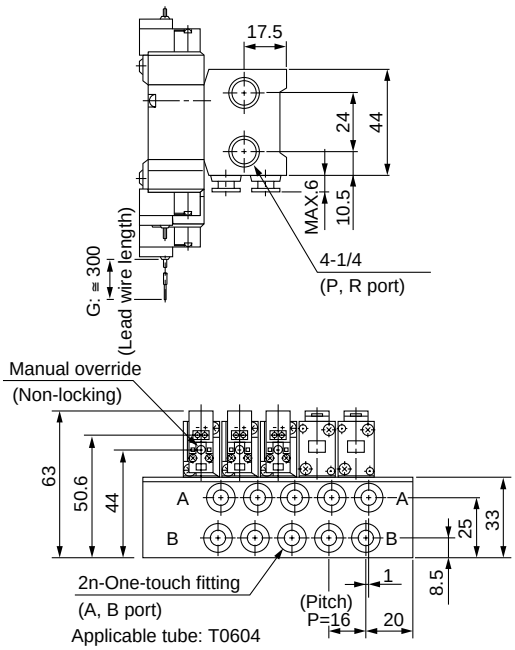

∗ Other dimensions are the same as the grommet style.

L plug connector (L)

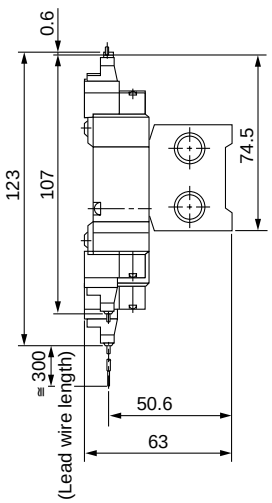

∗ Other dimensions are the same as the grommet style.

M plug connector (M)

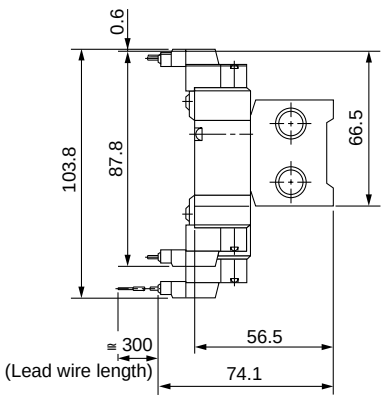

∗ Other dimensions are the same as the grommet style.

A, B port size	Station	2	3	4	5	6	7	8	9	10	11	12	13	14	15	16	17	18	19	20
Rc(PT) 1/8	L1	66	83	100	117	134	151	168	185	202	219	236	253	270	287	304	321	338	355	372
	L2	53	70	87	104	121	138	155	172	189	206	223	240	257	274	291	308	325	342	359
C6(ø6 One-touch fitting)	L1	65	81	97	113	129	145	161	177	193	209	225	241	257	273	289	305	321	337	353
	L2	52	68	84	100	116	132	148	164	180	196	212	228	244	260	276	292	308	324	340

43 Type Manifold: Side Ported/SS5YJ5-43-Station -C4□ -Q

Grommet (G), (H)

Built-in speed controller

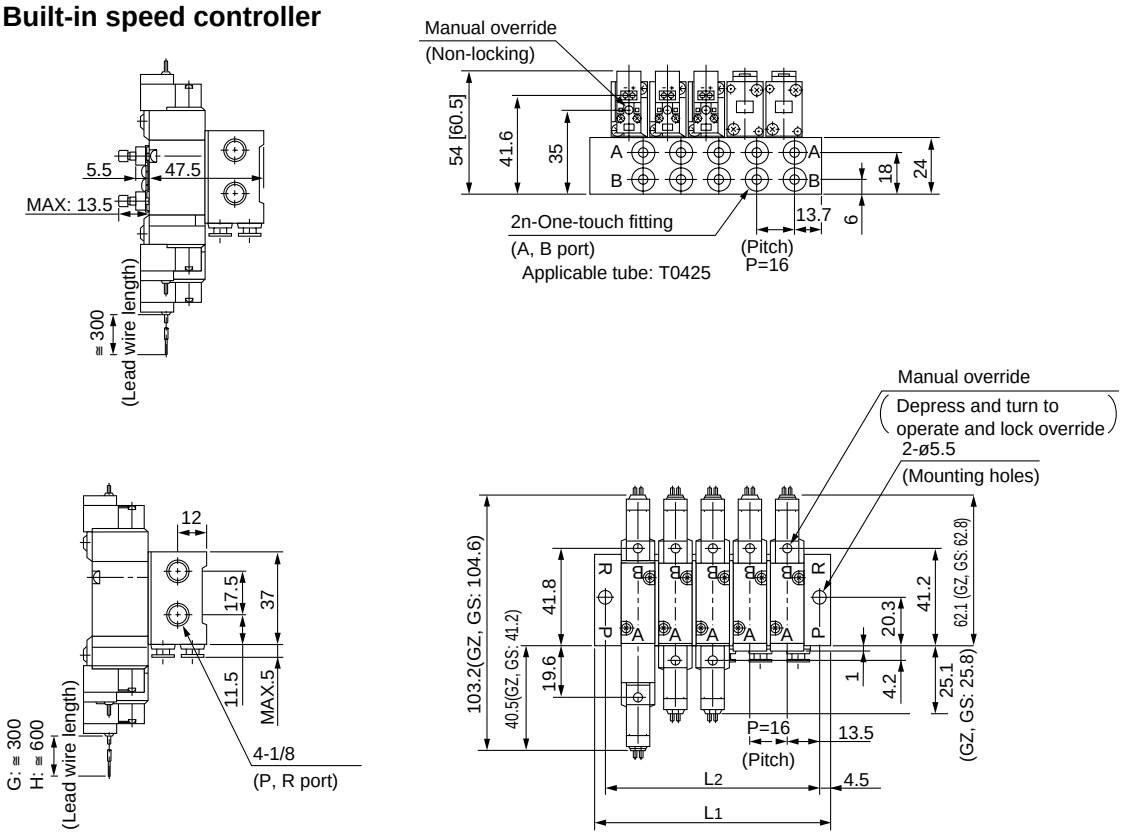

L plug connector (L)

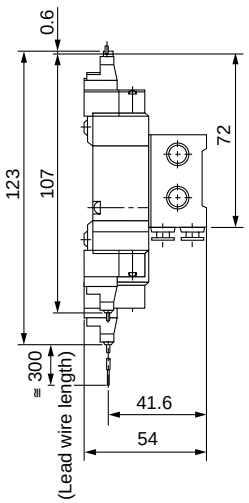

∗ Other dimensions are the same as the grommet style.

M plug connector (M)

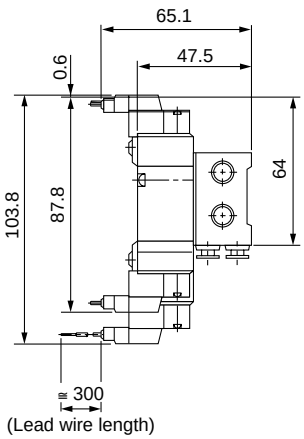

∗ Other dimensions are the same as the grommet style.

Stations	2	3	4	5	6	7	8	9	10	11	12	13	14	15	16	17	18	19	20
L1	52	68	84	100	116	132	148	164	180	196	212	228	244	260	276	292	308	324	340
L2	43	59	75	91	107	123	139	155	171	187	203	219	235	251	267	283	299	315	331

Flat Cable Manifold

SS5YJ5-20P-Station□ -Q

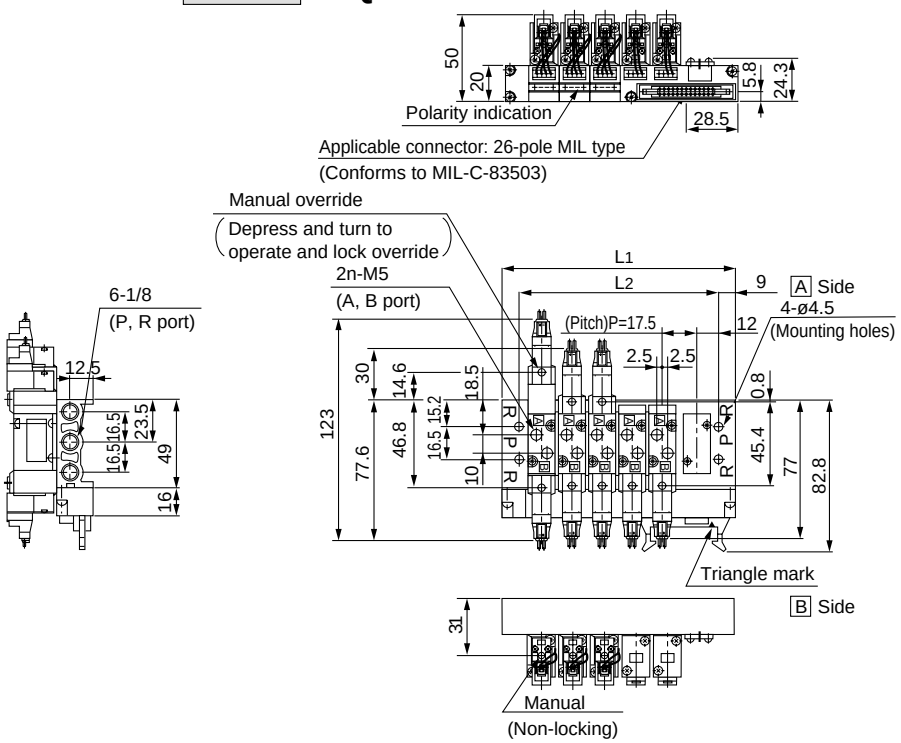

C4, C6
(Built-in One-touch fitting)

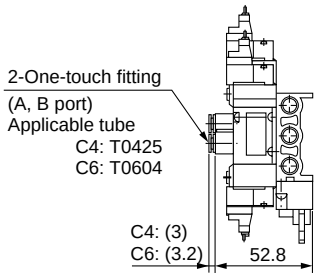

Stations	3	4	5	6	7	8	9	10	11	12
L1	77	94.5	112	129.5	147	164.5	182	199.5	217	234.5
L2	59	76.5	94	111.5	129	146.5	164	181.5	199	216.5

SS5YJ5-41P-Station-M5□-Q

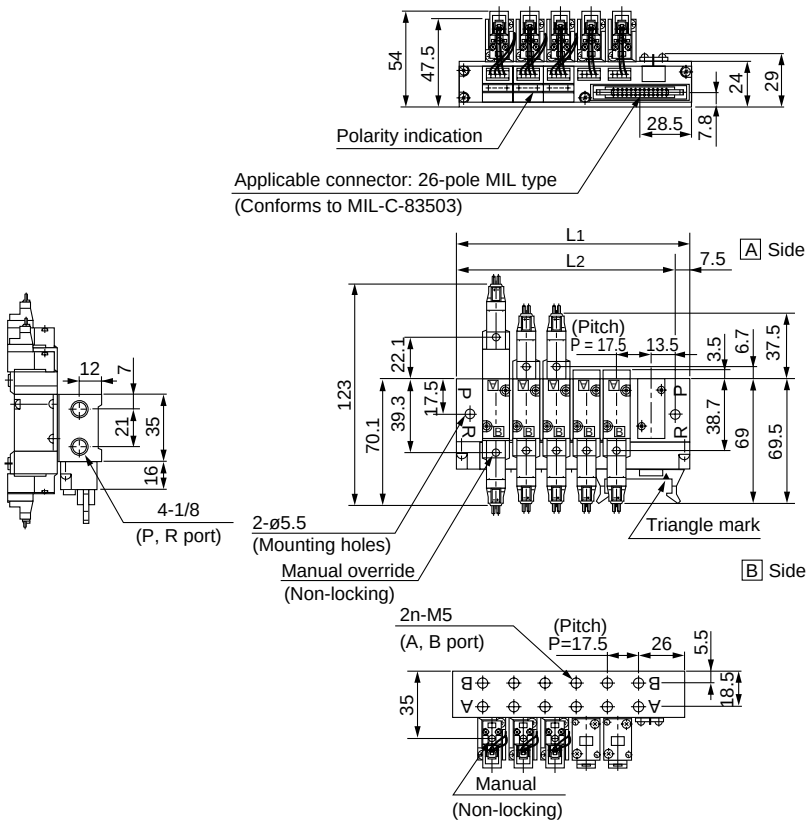

Built-in speed controller

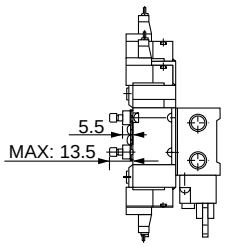

Station	3	4	5	6	7	8	9	10	11	12
L1	77	94.5	112	129.5	147	164.5	182	199.5	217	234.5
L2	62	79.5	97	114.5	132	149.5	167	184.5	202	219.5

Flat Cable Manifold

SS5YJ5-43P-Station-C4□ -Q

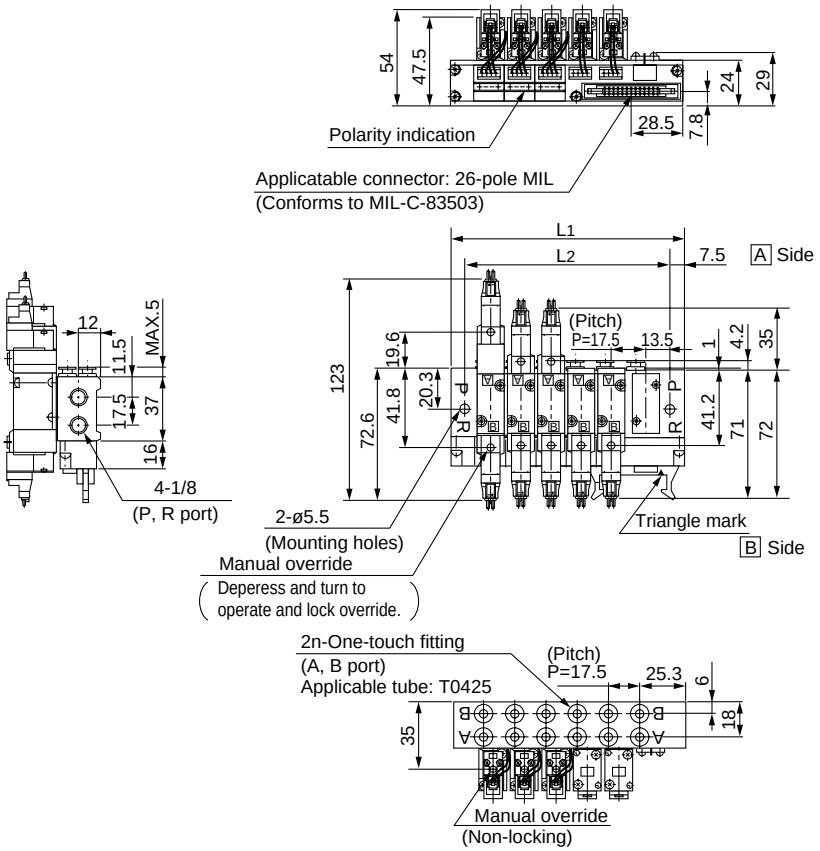

Built-in speed controller

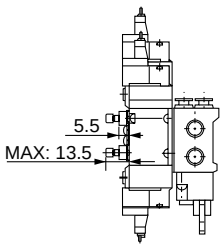

Stations	3	4	5	6	7	8	9	10	11	12
L_1	77	94.5	112	129.5	147	164.5	182	199.5	217	234.5
L_2	62	79.5	97	114.5	132	149.5	167	184.5	202	219.5

5 Port Solenoid Valve
Rubber Seal
Series ***SYJ7000***

Body ported

Base mounted

Model

Valve model		Configuration		Port size	Effective[1] area mm²(Nℓ/min)	Weight (g)[2] Grommet	Weight (g)[2] L / M plug connector
Body ported	SYJ7□20-□-01□ -Q	2 position	Single	1/8	11 (588.90)	82	84
			Double		11 (588.90)	92	96
		3 position	Closed centre		8.5 (461.31)	102	106
			Exhaust centre		9 (490.75) [6.5 (353.34)]		
			Pressure centre		P→A, B: 13.5 (736.13) [7 (382.79)] A, B→R1, R2: 7 (382.79)		
	SYJ7□20-□-C6□ -Q	2 position	Single	A, B port : C6 (ø6 One-touch fitting) P, R port : 1/8	8.6 (471.12)	93	95
			Double		8.6 (471.12)	103	107
		3 position	Closed centre		7.1 (382.79)	113	117
			Exhaust centre		8.4 (461.31) [6.2 (333.71)]		
			Pressure centre		P→A, B: 7.7 (412.23) [5.5 (294.45)] A, B→R1, R2: 7.1 (382.79)		
	SYJ7□20-□-C8□ -Q	2 position	Single	A, B port : C8 (ø8One-touch fitting) P, R port : 1/8	9.9 (539.83)	93	95
			Double		9.9 (539.83)	103	107
		3 position	Closed centre		8.2 (451.49)	113	117
			Exhaust centre		9.7 (530.01) [6.7 (363.16)]		
			Pressure centre		P→A, B: 9.3 (510.38) [5.6 (294.45)] A, B→R1, R2: 7.6 (412.23)		
Base mounted	SYJ7□40-□-01/02 □ -Q	2 position	Single	1/8 1/4	12.6 (687.05)	162 (82)	164 (84)
			Double		12.6 (687.05)	172 (92)	176 (96)
		3 position	Closed centre		8.5 (4461.31)	182 (102)	186 (106)
			Exhaust centre		9 (490.75) [6.5 (353.34)]		
			Pressure centre		P→A, B: 13.5 (736.13) [7 (382.79)] A, B→R1, R2: 7 (382.79)		

Note 1) In case of M5 and mounted on monifold base.
Note 2) ( ): Without sub-plate.

JIS Symbol

Body ported

2 position single

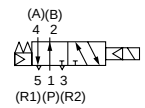

2 position double

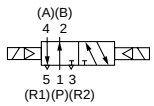

3 position closed centre

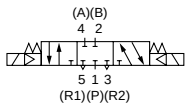

3 position exhaust centre

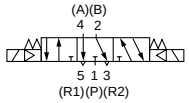

3 position pressure centre

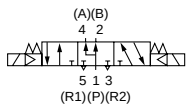

Base mounted

2 position single solenoid

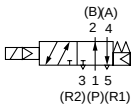

2 position double solenoid

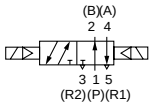

3 position closed centre

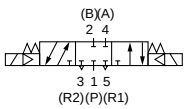

3 position exhaust centre

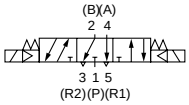

3 position pressure centre

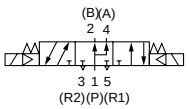

Specifications

Fluid		Air
Operating pressure range (MPa)	2 position single	0.15 to 0.7
	2 position double	0.1 to 0.7
	3 position	0.15 to 0.7
Ambient and fluid temperature(°C)		Max.50
Response time (ms) at 0.5MPa [4]	2 position single, double	≤ 30
	3 position	≤ 60
Max.operating frequency (Hz)	2 position single, double	5
	3 position	3
Manual override		Non-locking push, Push-turn-locking slotted style
Pilot exhaust		Individual pilot exhaust, Common exhaust (pilot and main valve)
Lubrication		Not required
Mounting orientation		Universal
Impact/Vibration resistance (m/s²) [5]		150/30
Protection structure		Dust proof

Note 4) According to dynamic performance test JIS B8375-1981 (Coil temperature 20°C, at rated voltage, without surge voltage suppressor)
Note 5) Impact resistance: No malfunction resulted from the impact test using a drop impact tester. The test was performed on the axis and right angle direction of the main valve and armature, for both energized and de-energized states. (Value in the initial stage)
Vibration resistance: No malfunction occurred in a one-sweep test between 8.3 and 2000Hz. Test was performed at both energized and de-energized states to axis and right angle direction of the main valve and armature. (Value in the initial stage)

Solenoid Specifications

Electrical entry		Grommet (G)/(H), L plug connector (L), M plug connector (M)
Coil reted voltage (V)	DC	24, 12, 6, 5, 3
Allowable voltage		±10% rated voltage
Power consumption (W)[6]		0.5 (With light: 0.55)
Surge voltage suppressor	DC	Diode
Indicator light		LED

Note 6) At rated voltage

Cylinder Maximum Operating Speed

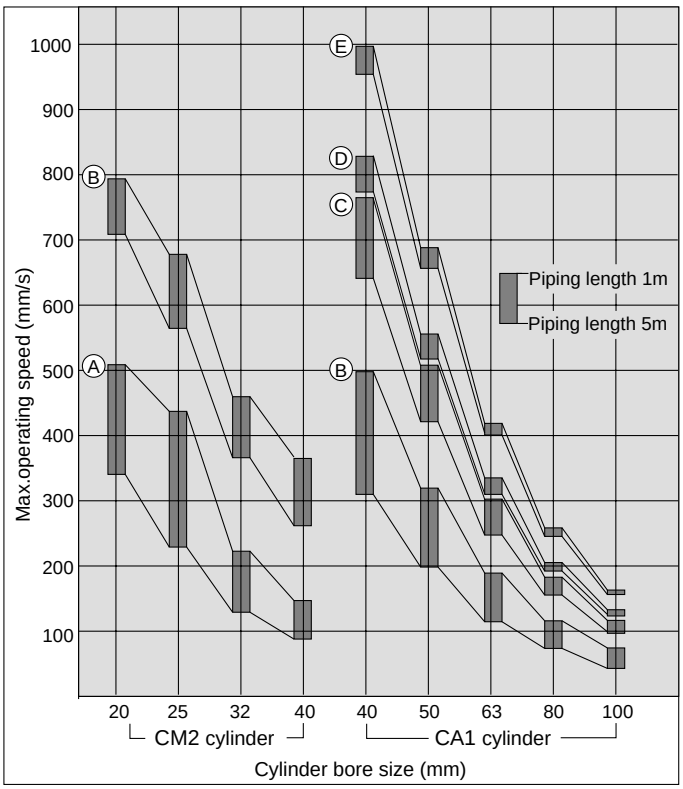

• **System Figure ①**

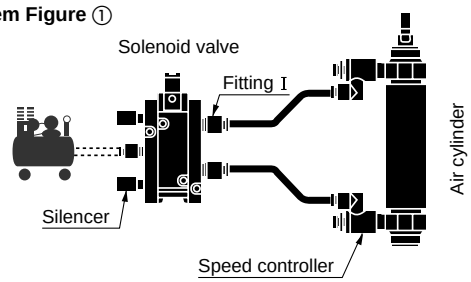

• **System Figure ②**

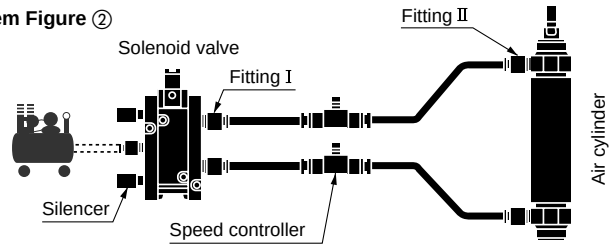

Operating conditions: Pressure 0.5MPa, Load rate 50%
At cylinder extended, cylinder stroke CM2: 300mm
CA1: 500mm

System components

System	Solenoid valve	Speed controller	Silencer	Fitting (Tube O.D. X Port size) Ⅰ	Fitting (Tube O.D. X Port size) Ⅱ	System figure
A	SYJ7□40-01 1/8 (S = 12.6mm^2)	AS2301F-01-04	AN110-01 (S = 35mm^2)	ø4 X 1/8	—	①
B	SYJ7□40-02 1/4 (S = 12.6mm^2)	AS3301F-$^{02}_{03}$-06	AN200-02 (S = 35mm^2)	ø6 X 1/4	—	①
C		AS3301F-$^{02}_{03}$-08		ø8 X 1/4	—	①
D		AS3301F-$^{02}_{03}$-10		ø10 X 1/4	—	①
E		AS4001F-12		ø12 X 1/4	ø12 X 1/2	②

How to Order

Configuration

1	2 position single solenoid
2	2 position double solenoid
3	3 position closed centre
4	3 position exhaust centre
5	3 position pressure centre

Light and surge voltage suppressor

—	Without light and surge suppressor
S	With surge suppressor
Z	With light and surge suppressor
U	With light and surge suppressor (Non-polar)

"U" types are available for DC voltage valves.

Bracket

—: Without bracket
F: With bracket

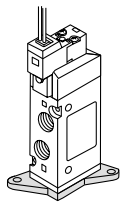

Note) Do not remove the factory installed bracket from models with the bracket option. Removal of the bracket will cause the valve to leak.

A/B port size

01	Rc(PT)1/8
C6	ø6 One-touch fitting
C8	ø8 One-touch fitting

Thread

-	Rc(PT)
F	G(PF)
N	NPT
T	NPTF

Rated voltage

For DC

5	24V DC
6	12V DC
V	6V DC
S	5V DC
R	3V DC
9	(Less than 50 VDC)

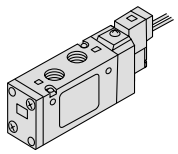

(For manifold type 20, 21)

Body ported SYJ7 1 2 0 — 5 M □ □ — 01 □ — □ -Q

Base mounted SYJ7 2 4 0 — 5 M □ □ — □ — □ -Q

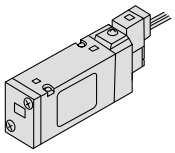

(For sub-plate, manifold type 40, 41, 42)

Body option

0: Individual exhaust for the pilot valve

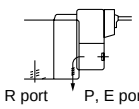

3: Common exhaust for the pilot and main valve

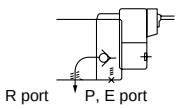

Manual override

—: Non-locking push style

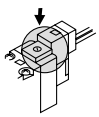

D: Push-turn-locking slotted style

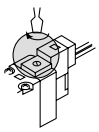

Port size

—: Without sub-plate

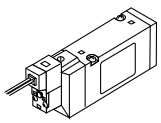

(With gasket and screws)

01: With 1/8 sub-plate Note)

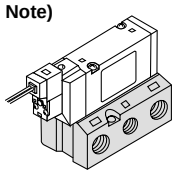

02: With 1/4 sub-plate

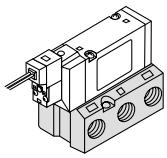

Note) R1and R2 port size 1/4

Electrical entry

24V, 12V, 6V, 5V, 3V DC			
Grommet	L plug connector	M plug connector	
G: 300mm lead wire	L: 300mm lead wire	M: 300mm lead wire	MN: Without lead wire
H: 600mm lead wire	LN: Without lead wire	LO: Without connector	MO: Without connector

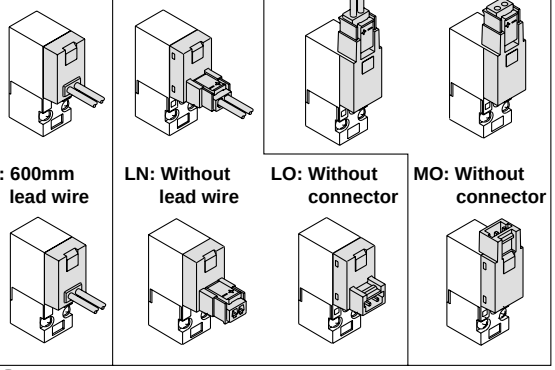

*LN and MN types are with 2 pcs. of socket.

Protective class class III (Mark:)

Order Made Contact SMC for other voltages (9)

Construction

2 position single

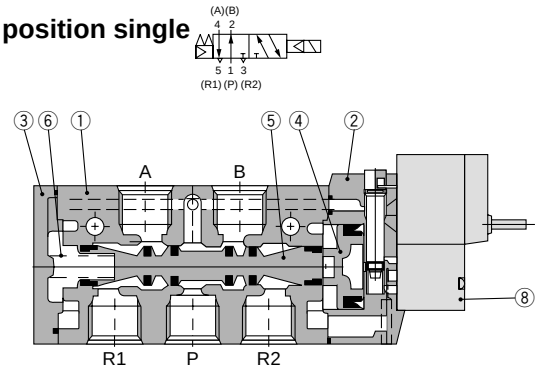

2 position double

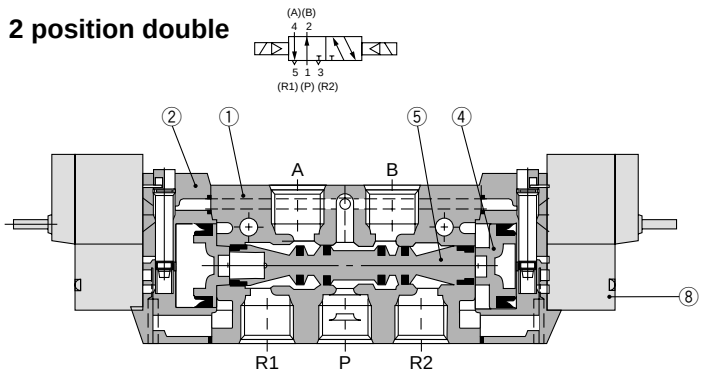

3 position closed centre/exhaust centre/pressure centre

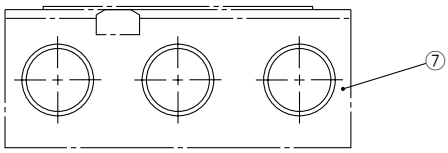

3 position closed centre

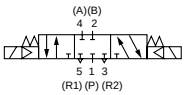

3 position exhaust centre

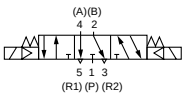

3 position pressure centre

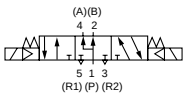

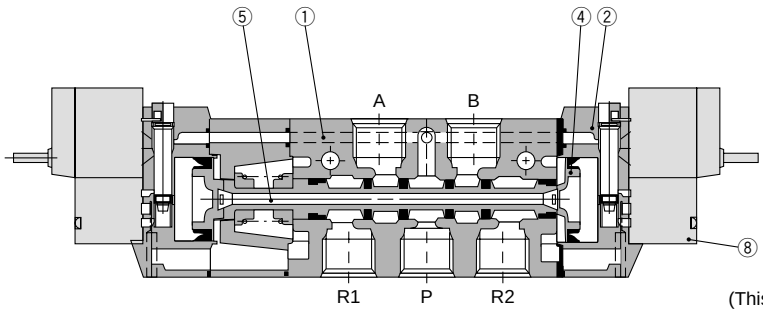

(This construction shows a closed centre.)

Component Parts

No.	Description	Material	Note
①	Body	Aluminum die cast	white
②	Piston plate	Resin	white
③	End cover	Aluminum die cast	white
④	Piston	Resin	—
⑤	Spool ass'y	—	—
⑥	Spool spring	SUS	—

Replacement Parts

No.	Description	Parts No.	Note	
⑦	Sub-plate	SYJ7000-22-1-Q	1/8	Aluminum die cast
		SYJ7000-22-2-Q	1/4	
⑧	Pilot valve	SY114-□□□-Q	—	

How to Order Pilot Valve Assembly

SY114 — 5 G □ -Q

Voltage

5	24V DC
6	12V DC
V	6V DC
S	5V DC
R	3V DC

Electrical entry

G	Grommet (Lead wire length: 300mm)	
H	Grommet (Lead wire length: 600mm)	
L	L plug connector	With lead wire
LN		Without lead wire
LO		Without connector
M	M plug connector	With lead wire
MN		Without lead wire
MO		Without connector

Light and surge voltage suppressor

—	Without light and surge suppressor
S	With surge suppressor
Z	With light and surge suppressor
U	With light and surge suppressor (Non-polar)

How to Order Connector Assembly

DC: : SY100-30-4A-□

Without lead wire (with connector and 2 pcs. of socket) : SY100-30A

Lead wire length

—	300mm
6	600mm
10	1000mm
15	1500mm
20	2000mm
25	2500mm
30	3000mm
50	5000mm

2 Position Single

Grommet (G), (H): SYJ7120- □$^{G}_{H}$□□-01□ -Q

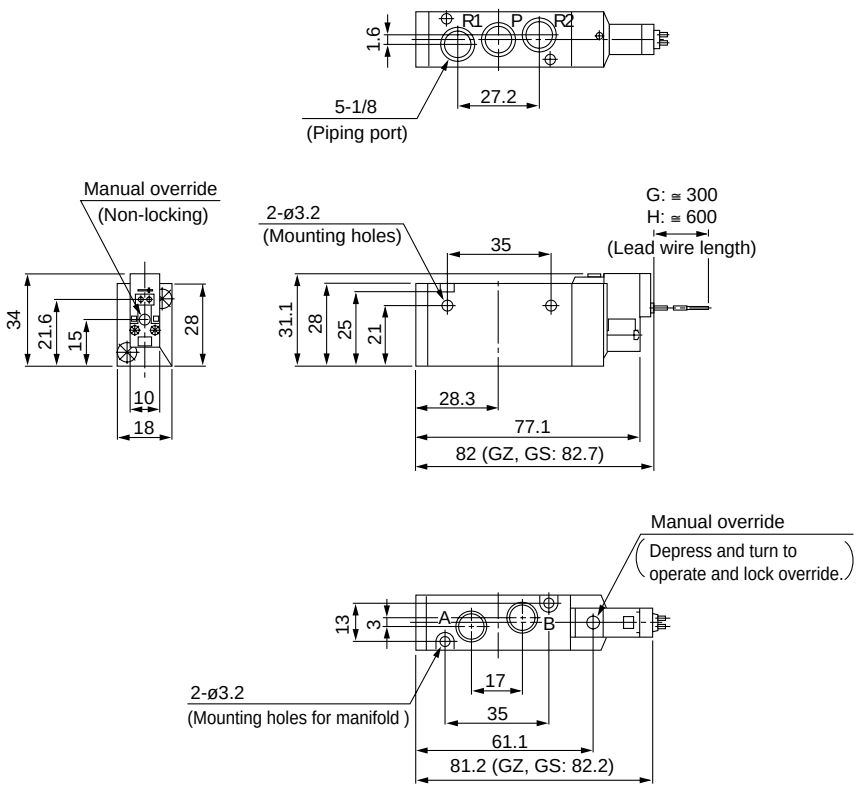

With bracket

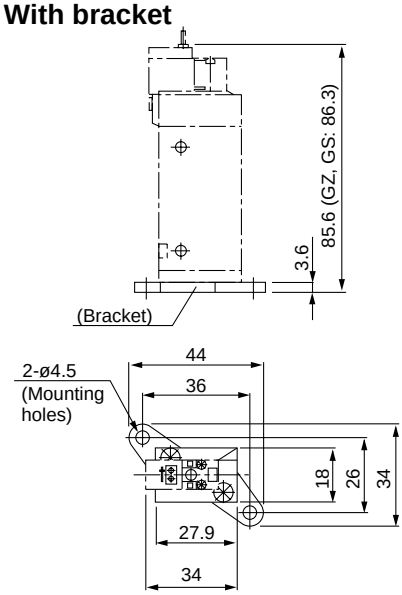

Built-in One-touch fitting: SYJ7120-□$^{G}_{H}$□□-$^{C6}_{C8}$□ -Q

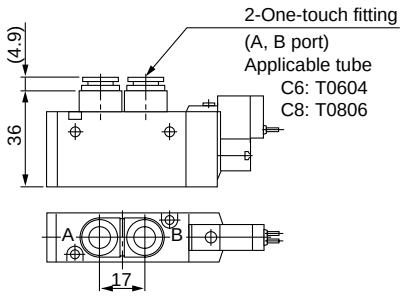

∗ Other dimensions are the same as the grommet style.

L plug connector(L): SYJ7120- □L□□□-01□ -Q

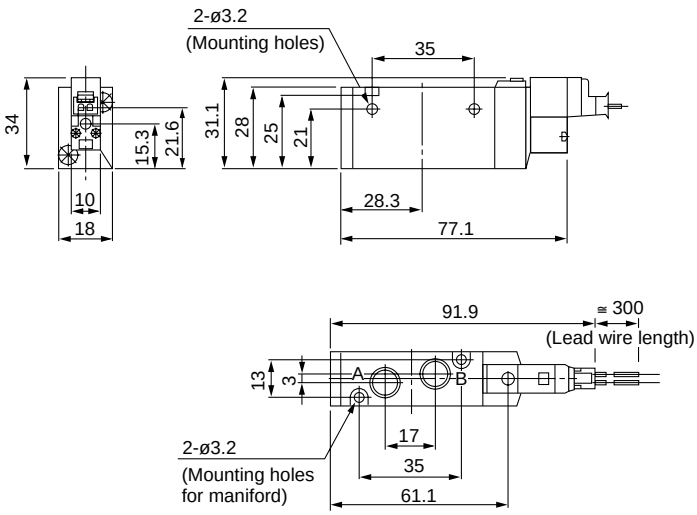

∗ Other dimensions are the same as the grommet style.

M plug connector (M): SYJ7120- □M□□-01□ -Q

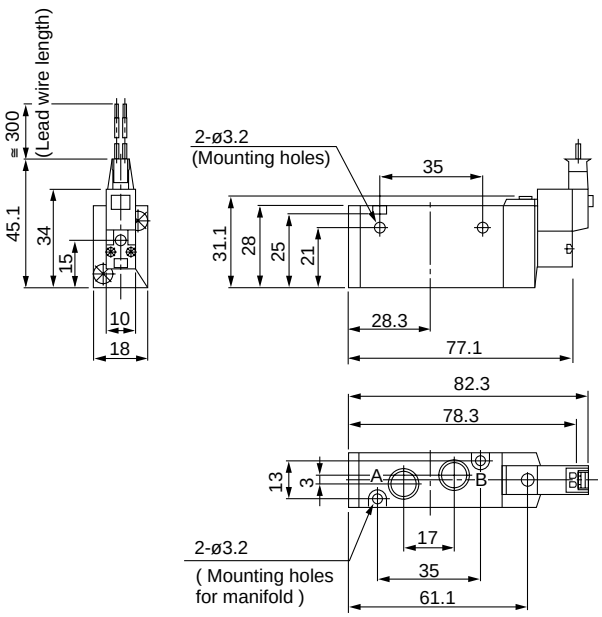

∗ Other dimensions are the same as the grommet style.

2 Position Double

Grommet (G), (H): SYJ7220-□$^{G}_{H}$□□-01□-Q

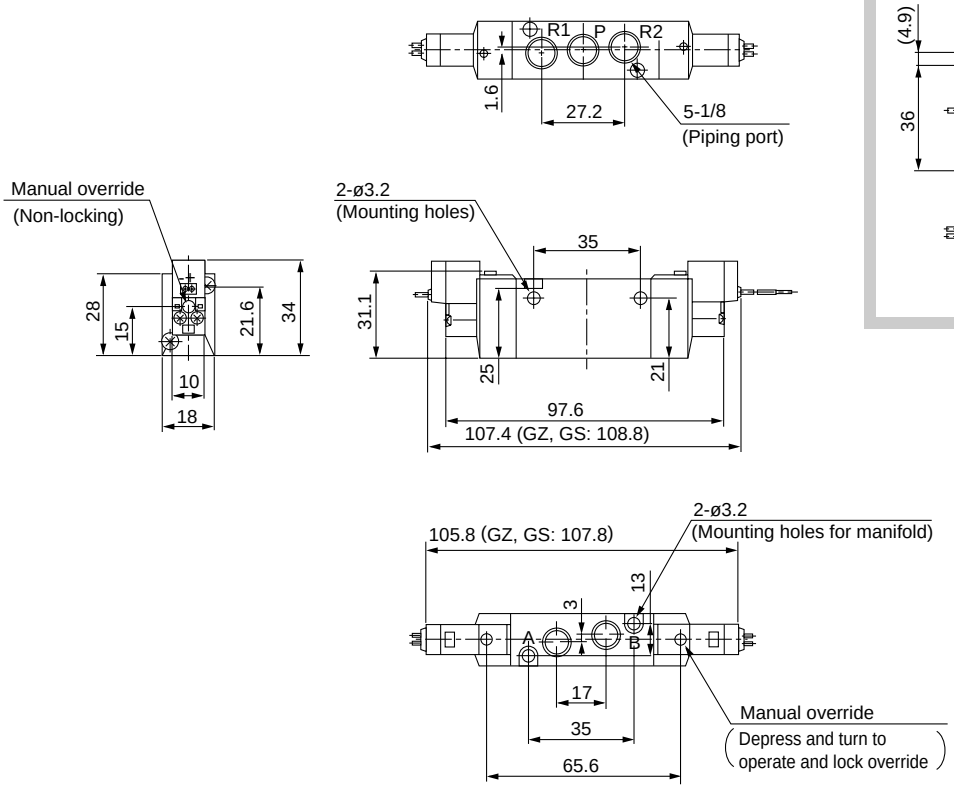

Built-in One-touch fitting
SYJ7220-□$^{G}_{H}$□□-$^{C6}_{C8}$□ -Q

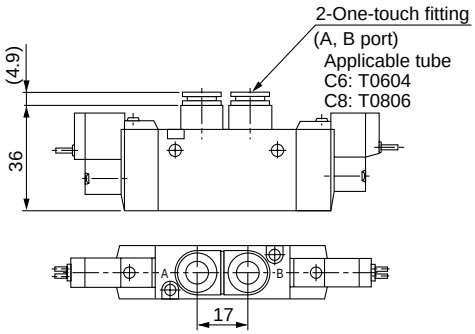

L plug connector(L): SYJ7220-□L□□-01□ -Q

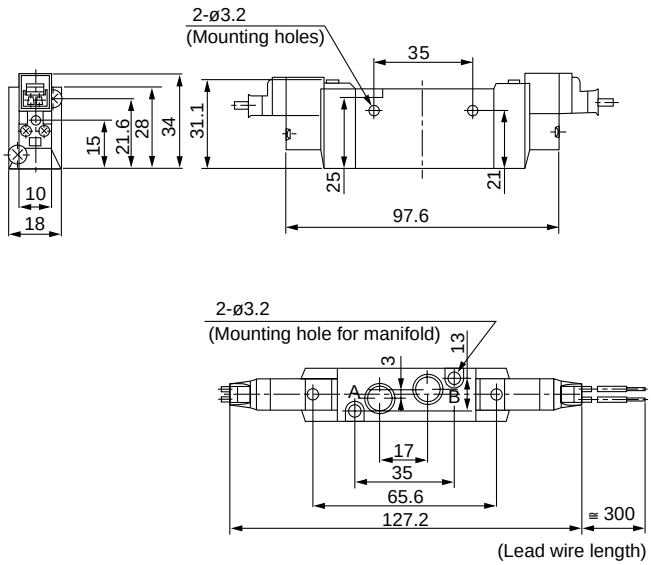

∗ Other dimensions are the same as the grommet style.

M plug connector (M):SYJ7220- □M□□-01□ -Q

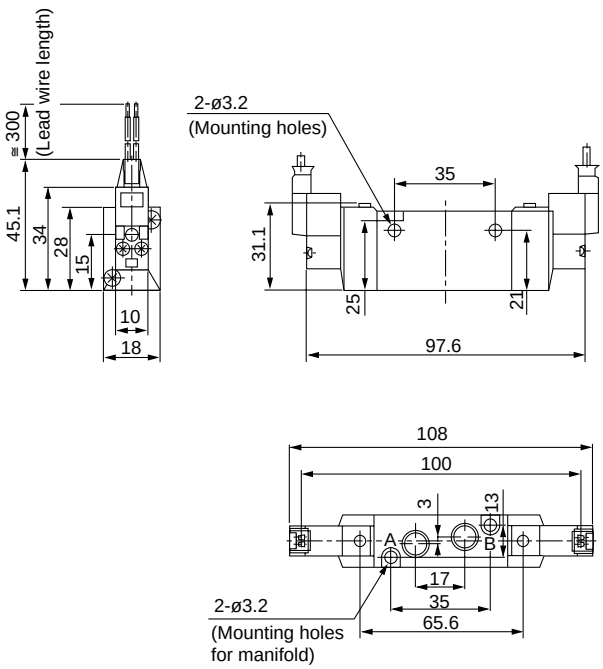

∗ Other dimensions are the same as the grommet style.

3 Position Closed Centre/Exhaust Centre/Pressure Centre

Grommet (G), (H): SYJ7$^{3}_{4}_{5}$20-□$^{G}_{H}$□□-01□ -Q

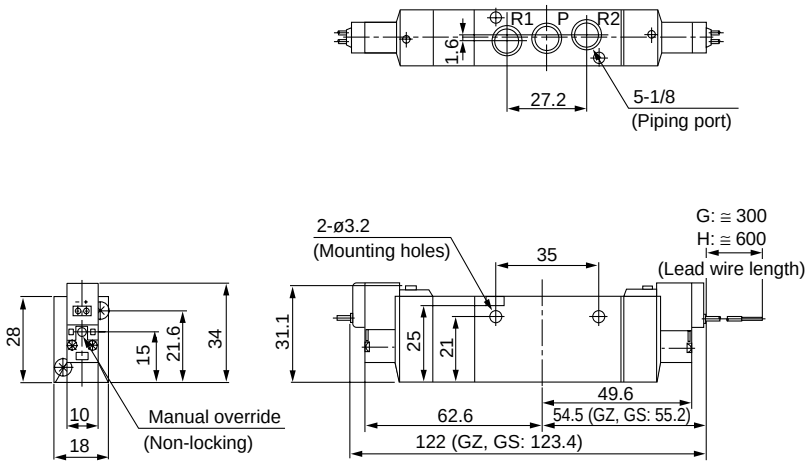

Built-in One-touch fitting: SYJ7$^{3}_{4}_{5}$20-□$^{G}_{H}$-□□$^{C6}_{C8}$□ -Q

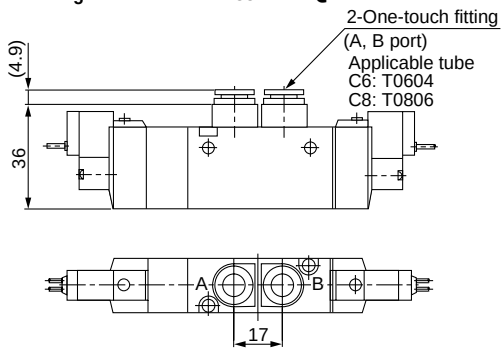

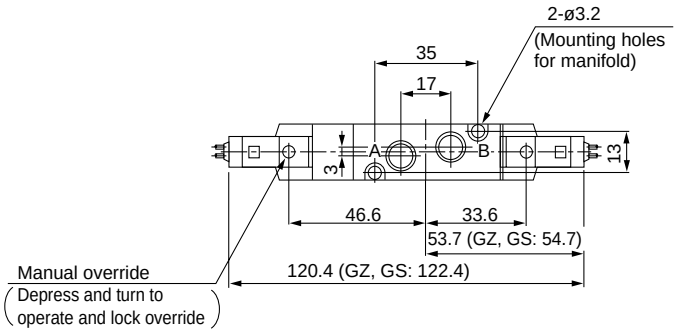

L plug connecter (L): SYJ7$^{3}_{4}_{5}$20-□L□□-01□-Q

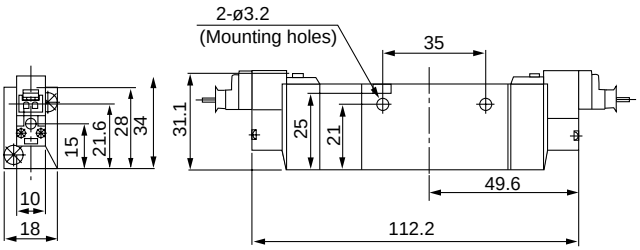

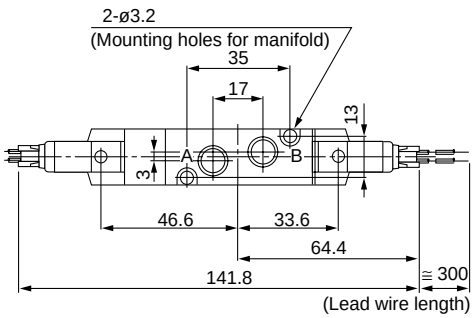

∗ Other dimensions are the same as the grommet style.

M plug connector (M): SYJ7$^{3}_{4}_{5}$20-□M□□-01□-Q

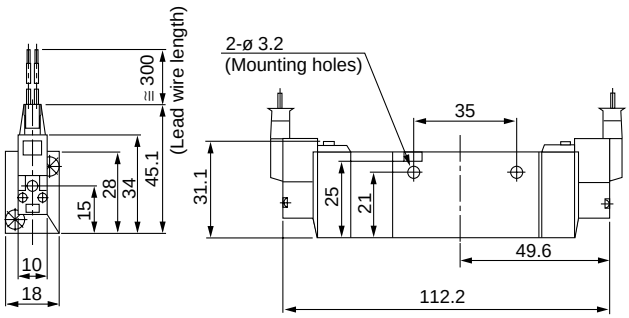

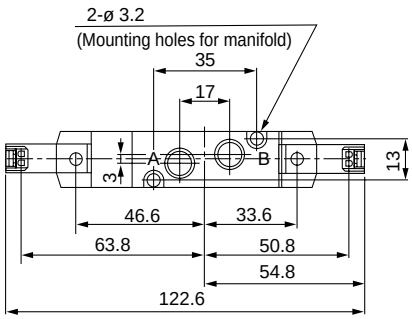

∗ Other dimensions are the same as the grommet style.

2 Position Single

Grommet (G), (H): SYJ7140- □ G/H □□- 01/02 □-Q

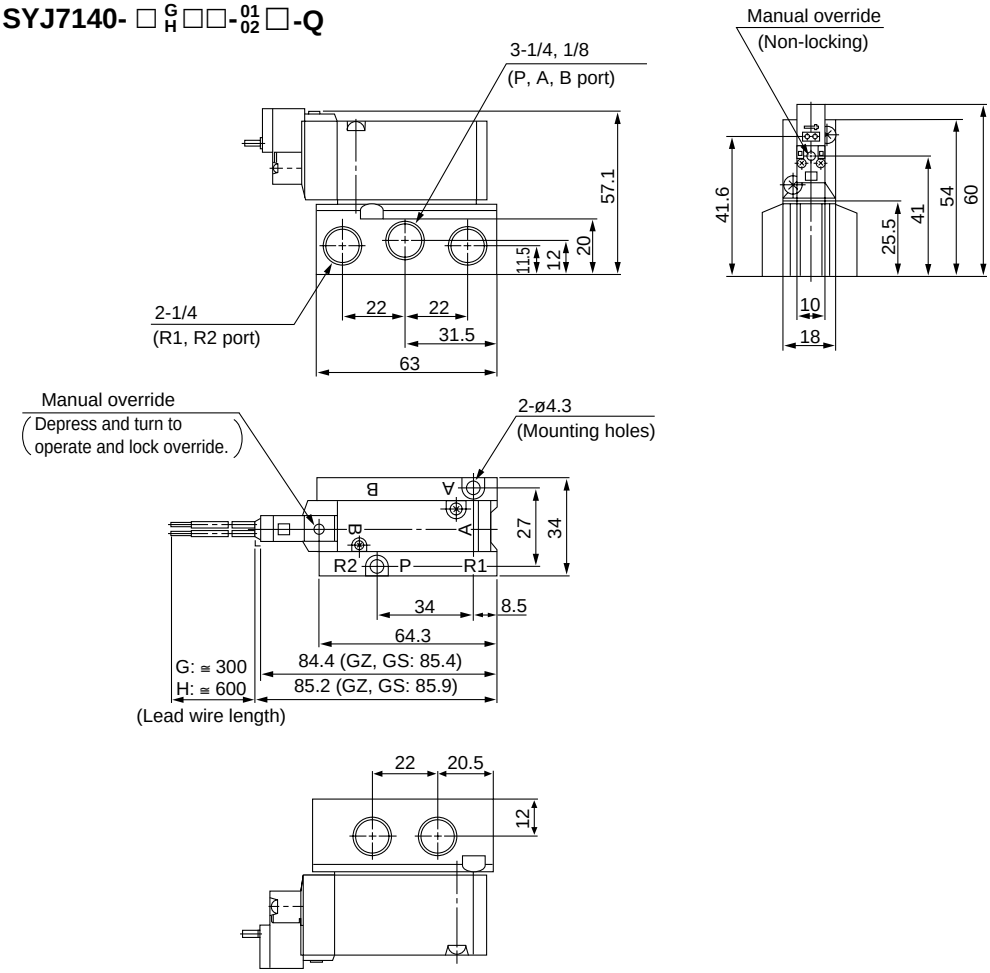

L plug connector (L): SYJ7140-□-□□- 01/02 □-Q

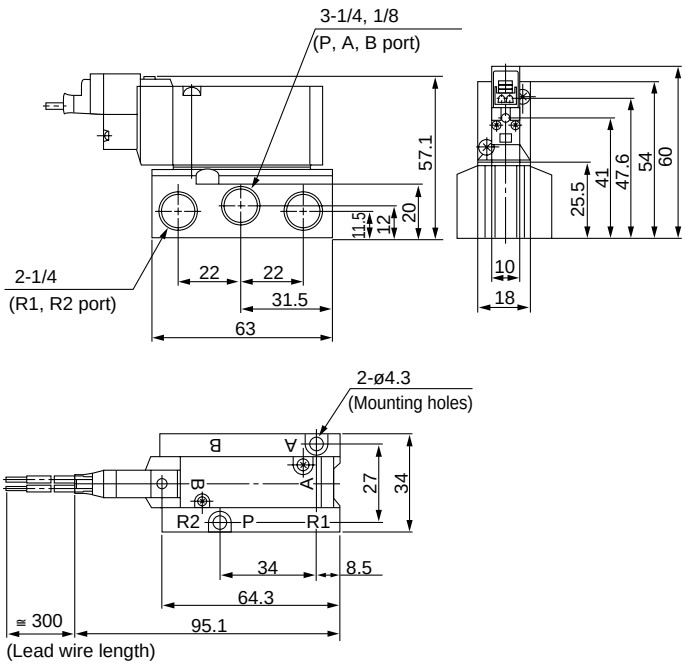

* Other dimensions are the same as the grommet style.

M plug connector (M): SYJ7140- □M□□- 01/02 □-Q

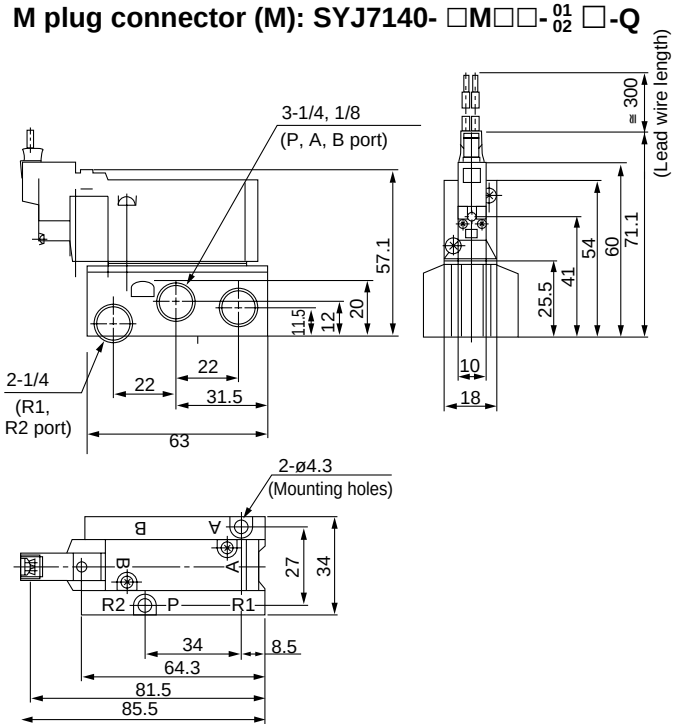

* Other dimensions are the same as the grommet style.

2 Position Double

Grommet (G), (H): SYJ7240-□$^{G}_{H}$□□-$^{01}_{02}$□-Q

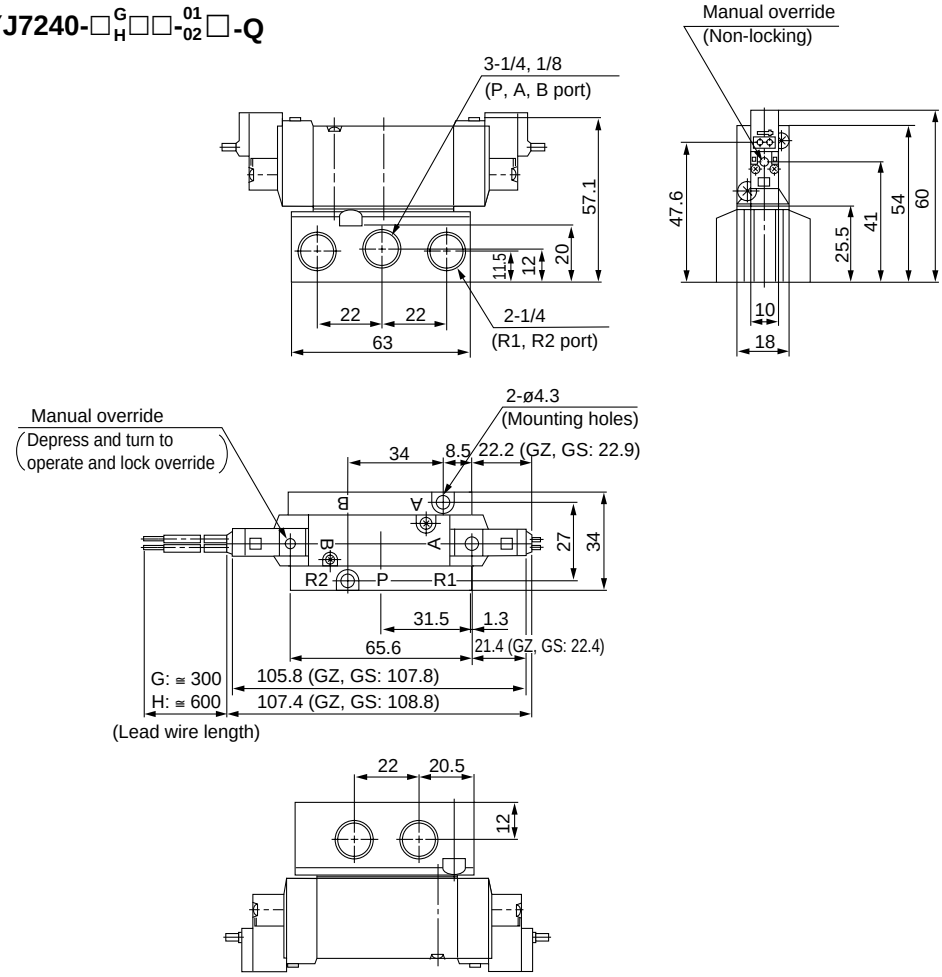

L plug connector (L): SYJ7240-□L□□-$^{01}_{02}$□-Q

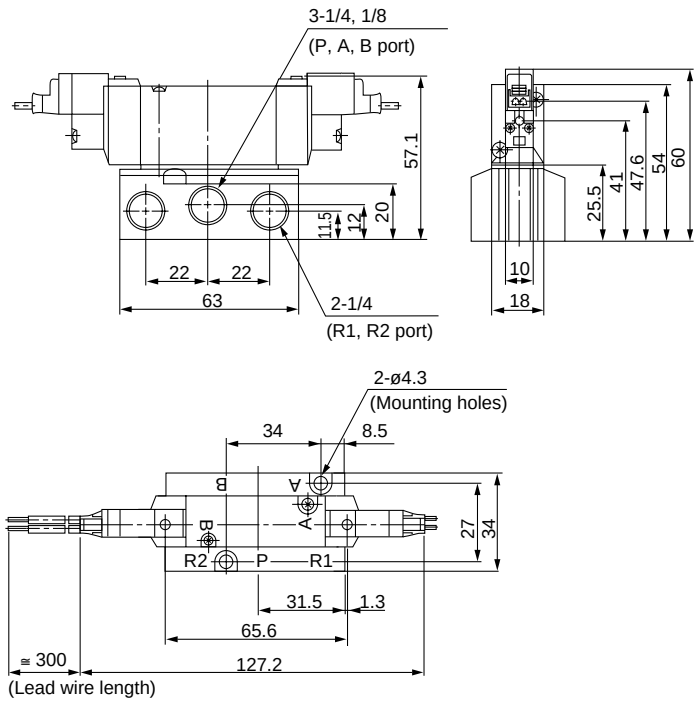

∗ Other dimensions are the same as the grommet style.

M plug connector (M): SYJ7240- □M□□-$^{01}_{02}$□-Q

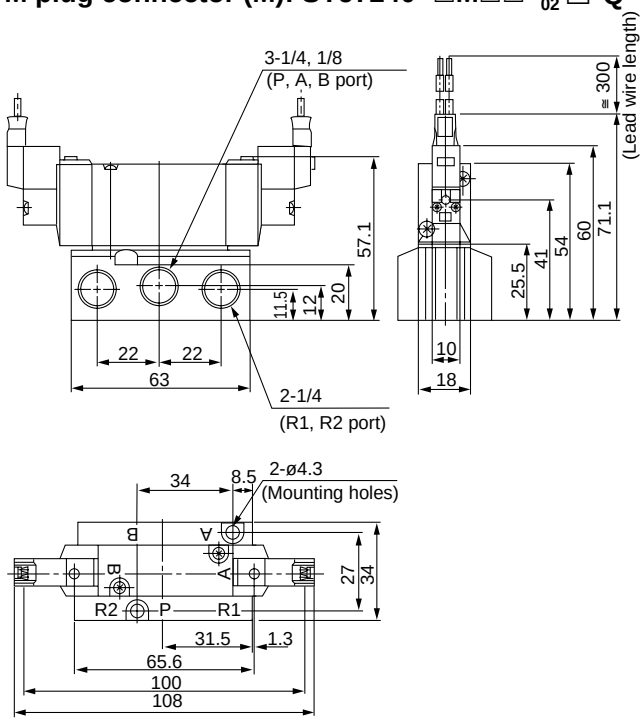

∗ Other dimensions are the same as the grommet style.

3 Position Closed Centre/Exhaust Centre/Pressure Centre

Grommet(G), (H): SYJ7$^{3}_{4}_{5}$40-□$^{G}_{H}$□□-$^{01}_{02}$□-Q

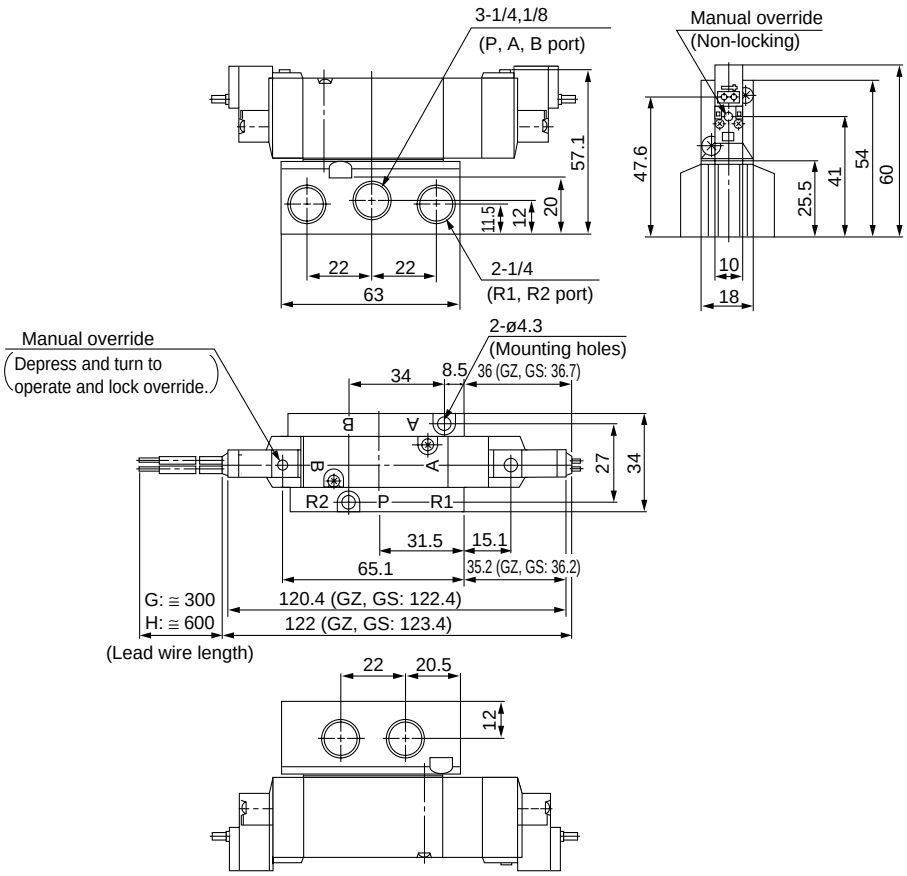

L plug connector (L): SYJ7$^{3}_{4}_{5}$40-□L□□-$^{01}_{02}$□-Q

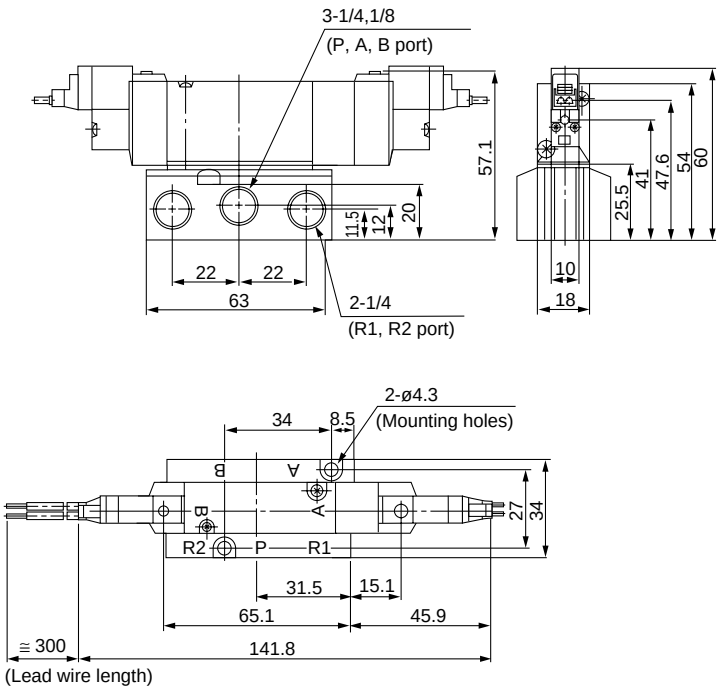

∗ Other dimensions are the same as the grommet style.

M plug connector (M): SYJ7$^{3}_{4}_{5}$40-□M□□-$^{01}_{02}$□-Q

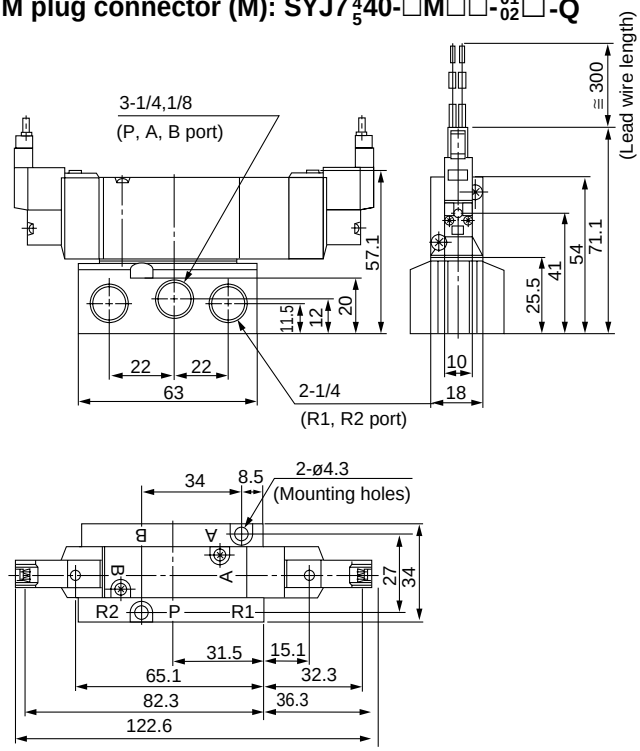

∗ Other dimensions are the same as the grommet style.

Manifold

Standard

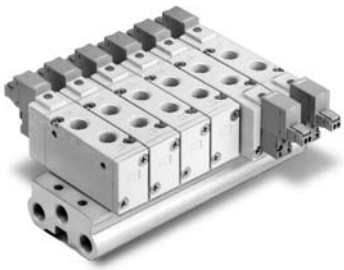

Manifold Specifications

Type		20	21	40	41	42
Manifold style		Single base style/B mount				
P (SUP), R (EXH) style		Common SUP, Common EXH				
Valve stations		2 to 15 stations	2 to 20 stations			
A, B port specifications	Location	Valve		Base	Base	
	Direction	Top		Bottom	Side	
Port size	P, R port	1/8	1/4			
	A, B port	Rc(PT)1/8 C6 (ø6 One-touch fitting) C8 (ø8 One-touch fitting)		1/8		C6 (ø6 One-touch fitting) C8 (ø8 One-touch fitting)
Valve effective area (1) mm²(Nℓ/min)	Body ported **SYJ7□2□**	1/8: 11 (588.90) C6: 8.6 (471.12) C8: 9.9 (539.83)		—	—	—
	Base mounted **SYJ7□4□**	—	—	11.9 (647.79)	9.5 (520.20)	C6: 8.5 (461.31) C8: 9.7 (530.01)

Note 1) Value for a single solenoid 2 position valve mounted on the manifold.

How to Order Valve Manifold

Specify the part numbers for the valve(s), blank plate ass'y, and manifold base.

Example

- **SS5YJ7-20-03-Q** .....1 pc. (Manifold base)
  SYJ7120-5G-01-Q .....2 pcs. (Valve)
  SYJ7000-21-1A-Q .....1 pc. (Blank plate ass'y)

- **SS5YJ7-41-03-01-Q** .....1 pc. (Manifold base)
  SYJ7140-5LZ-Q .....1 pc. (Valve)
  SYJ7240-5LZ-Q .....1 pc. (Valve)
  SYJ7000-21-1A-Q .....1 pc. (Blank plate ass'y)

∗ Use manifold specification sheet.

Flat Cable Manifold

- **Multiple valve wiring is simplified through the use of the flat cable connector.**

- **Clean appearance**
  With the flat cable manifold, each valve is wired to the manifold base.
  A single MIL specification flat cable connects the entire manifold to the power source.
  This greatly reduces installation time.

Flat Cable Manifold Specifications

Type		21P
Manifold style		Single base style/B mount
P (SUP), R (EXH) sytle		Common SUP, Common EXH
Valve stations		3 to 12 stations
A, B port specifications		Valve
Port size	P, R port	1/4
	A, B port	1/8,C6, C8
Valve effective area mm²(Nℓ/min) (1)	SYJ7□23	1/8: 11 (588.90) C6: 8.6 (471.12) C8: 9.9 (539.83)
Connector		Socket: 26 poles MIL type with strain relief conforms to MIL-C-83503
Internal wiring (2)		Both for +COM and –COM
Rated voltage		24V DC, 12V DC

Note 1) Value for a single operation of 2 position valve mounted on the manifold base.
Note 2) The withstand voltage specification for the unit with section conforms to JISC0704, Grade 1 or its equivalent

How to Order Valve Manifold

Specify the part numbers for the valve(s), blank plate ass'y, and manifold base.

Example
- **SS5YJ7-21P-07-Q**.....1 pc.(Manifold base)
  SYJ7123-5LOU-C8-Q .....3 pcs.(Valve)
  SYJ7223-5LOU-C8-Q .....3 pcs.(Valve)
  SYJ7000-21-3A-Q .....1 pc.(Blank plate ass'y)
  SY3000-37-42A ..... 3 pcs. (Connector ass'y)
  SY3000-37-43A ..... 3 pcs. (Connector ass'y)

∗ Use manifold specification sheet.

⚠ Caution
The manifold can be wired for either positive or negative common because only non-polar valves are used.
The use of valves other than non polar types are not recommended. It may cause damage to the electrical circuit.

How to Order Valve

Rated voltage

5	24V DC
6	12V DC

DC SYJ7 1 23— 5 LOU □ — □ □ -Q

Configuration

1	2 position single solenoid
2	2 position double solenoid
3	3 position closed centre
4	3 position exhaust centre
5	3 position pressure centre

A/B port size

—	Base mounted
01	1/8
C6	ø6 One-touch fitting
C8	ø8 One-touch fitting

Thread

-	Rc(PT)
F	G(PF)
N	NPT
T	NPTF

Manual override

—	Non-locking push style
D	Push-turn-locking slotted style
E	Push-turn-locking knob style

Note) Flat cable style:
"U" type is for DC specification.
Contact SMC for other specifications

How to Order Connector Ass'y

For 12V/24V DC

Single solenoid	SY3000-37-42A
Double solenoid 3 position	SY3000-37-43A
Single with spacer ass'y	SY3000-37-44A
Double solenoid 3 position with spacer ass'y	SY3000-37-45A

⚠ Protective class class III (Mark:)

Common SUP/Common EXH

20 Type (5 Port/Body ported)

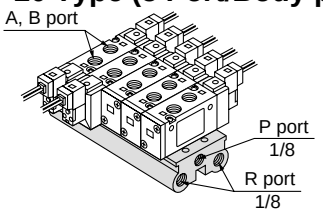

How to Order

SS5YJ7--20--05--□--Q

Stations

02	2 stations
:	:
15	15 stations

P, R port thread

—	Rc (PT)
00F	G (PF)
00N	NPT
00T	NPTF

Note) For more than 6 stations, supply air to both sides of "P" port and exhaust air from both sides of "R" port.

Applicable solenoid valve

SYJ7□20-□□□□-01/C6/C8-Q

SYJ7□23-□□□□-01/C6/C8-Q

Applicable blank plate assembly

SYJ7000-21-1A-1-Q

Applicable individual EXH spacer assembly

SYJ7000-17-1A-Q

21 Type (5 Port/Body ported)

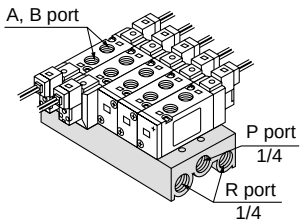

How to Order

SS5YJ7--21--05--□--Q

Stations

02	2 stations
:	:
20	20 stations

P, R port thread

—	Rc (PT)
00F	G (PF)
00N	NPT
00T	NPTF

Note) For more than 10 stations, supply air to both sides of "P" port and exhaust air from both sides of "R" port.

40 Type (5 Port/Base mounted)

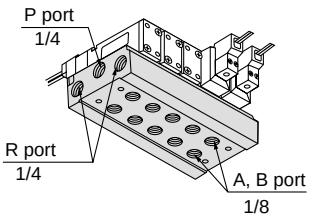

How to Order

SS5YJ7--40--05--01--□--Q

Stations

02	2 stations
:	:
20	20 stations

A, B port size

01	1/8

P, R port thread

—	Rc (PT)
F	G (PF)
N	NPT
T	NPTF

Note) For more than 10 stations, supply air to both sides of "P" port and exhaust air from both sides of "R" port.

41 Type (5 Port/Base mounted)

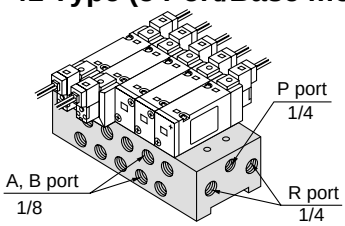

How to Order

SS5YJ7--41--05--01--□--Q

Stations

02	2 stations
:	:
20	20 stations

A, B port size

01	1/8

P, R port thread

—	Rc (PT)
F	G (PF)
N	NPT
T	NPTF

Note) For more than 8 stations, supply air to both sides of "P" port and exhaust air fromboth sides of "R" port.

Applicable solenoid valve

SYJ7□40-□□□□-Q

SYJ7□43-□□□□-Q

Applicable blank plate assembly

SYJ7000-21-1A-2-Q

Applicable individual EXH spacer assembly

SYJ7000-17-2A-Q

Applicable individual SUP spacer assembly

SYJ7000-16-2A-Q

Applicable interface regulator

ARBYJ7000-00-P-Q

42 Type (5 Port/Base mounted)

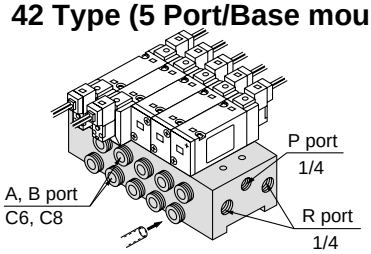

How to Order

SS5YJ7--42--05--C6--□--Q

Stations

02	2 stations
:	:
20	20 stations

A, B port size

C6	C6(ø6 One-touch fitting)
C8	C8(ø8 One-touch fitting)

P, R port thread

—	Rc (PT)
F	G (PF)
N	NPT
T	NPTF

Note) For more than 8 stations, supply air to both sides of "P" port and exhaust air from both sides of "R" port.

Flat Cable Manifold/Common SUP/Common EXH

21P Type (5 Port/Body ported)

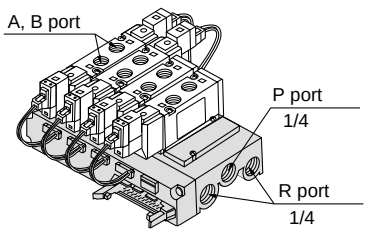

How to Order

SS5YJ7--21P--05--□--Q

Stations

03	3 stations
:	:
12	12 stations

P, R port thread

—	Rc (PT)
00F	G (PF)
00N	NPT
00T	NPTF

Note) For more than 10 stations, supply air to both sides of "P" port and exhaust air from both sides of "R" port.

Applicable solenoid valve

Refer to the below.

Applicable blank plate assembly

SYJ7000-21-3A-Q

Applicable connector assembly

Refer to the below.

Combinations of Solenoid Valve, Manifold Gasket and Manifold Base

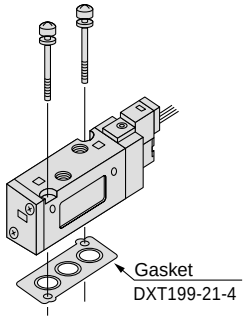

Applicable manifold base
SS5YJ7-20
SS5YJ7-21

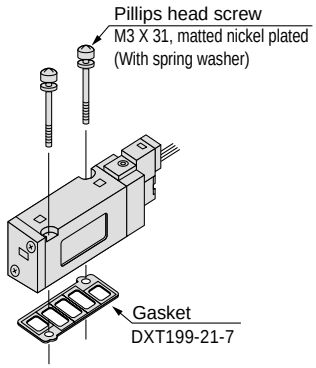

Applicable manifold base
Sub-plate: SYJ7000-22-1/2*-Q
SS5YJ7-40
SS5YJ7-41
SS5YJ7-42

Thread	
-	Rc(PT)
F	G(PF)
N	NPT
T	NPTF

Installation of the SYJ700 Valve on the SYJ7000 Manifold

- Use of an adaptor plate makes it possible to mount series SYJ700 on the manifold bases of SYJ7000 series .
- Pilot valve should be installed to be located in the same side as the single solenoid of series SYJ7000 as shown in the following drawing.
- For base mounted style, the A port of the 3 port valve flows out the B port of manifold base.

Adaptor Plate Ass'y
SYJ700-3-1A-Q Series SYJ700 Body ported type

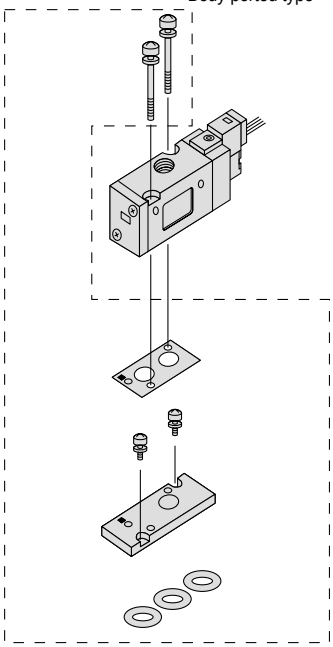

Applicable manifold base
SS5YJ7-20
SS5YJ7-21

Adaptor Plate Ass'y
SYJ700-3-2A-Q Series SYJ700 Base mounted type

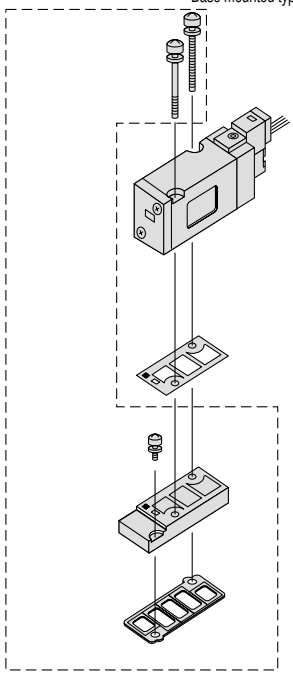

Applicable manifold base
SS5YJ7-40
SS5YJ7-41
SS5YJ7-42

Individual Exhaust Interface Ass'y

SYJ7000-17-1*A-Q

Thread	
-	Rc(PT)
F	G(PF)
N	NPT
T	NPTF

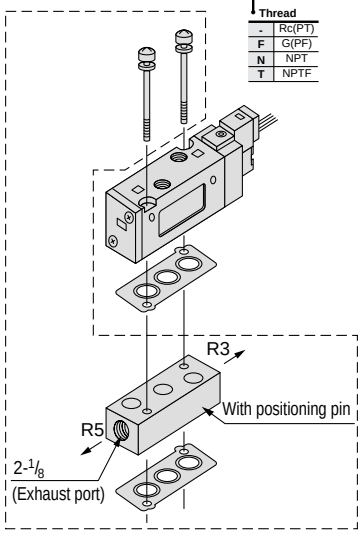

Applicable manifold base
SS5YJ7-20
SS5YJ7-21

SYJ7000-17-2*A-Q

Thread	
-	Rc(PT)
F	G(PF)
N	NPT
T	NPTF

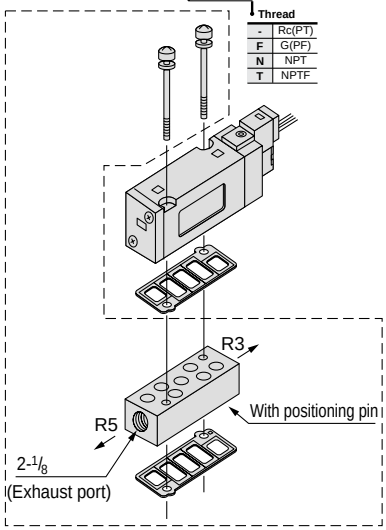

Applicable manifold base
SS5YJ7-40
SS5YJ7-41
SS5YJ7-42

Blank Plate Assembly

SYJ7000-21-1A-1-Q

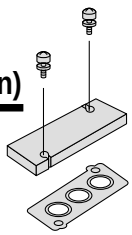

Applicable manifold base
SS5YJ7-20
SS5YJ7-21

SYJ7000-21-1A-2-Q

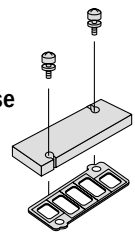

Applicable manifold base
SS5YJ7-40
SS5YJ7-41
SS5YJ7-42

SYJ7000-21-3A-Q

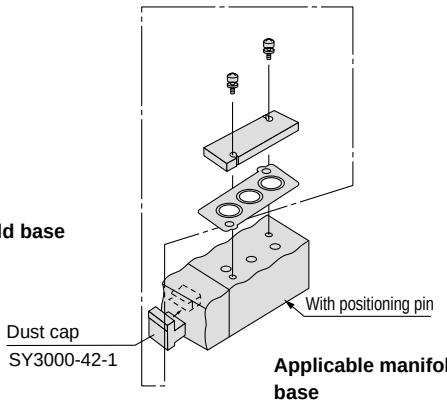

Applicable manifold base
SS5YJ7-21P

Individual Supply Interface Ass'y

SYJ7000-16-2*A-Q

Thread	
-	Rc(PT)
F	G(PF)
N	NPT
T	NPTF

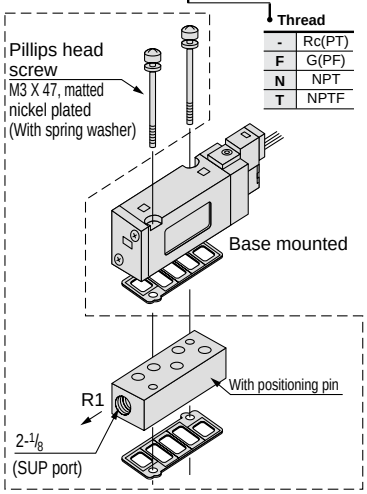

Applicable manifold base
SS5YJ7-40
SS5YJ7-41
SS5YJ7-42

Interface Regulator(P regulation)

Putting interface regulator on the manifold base makes it possible to reduce supply pressure to a valve individually.

ARBYJ5000-00-P-Q

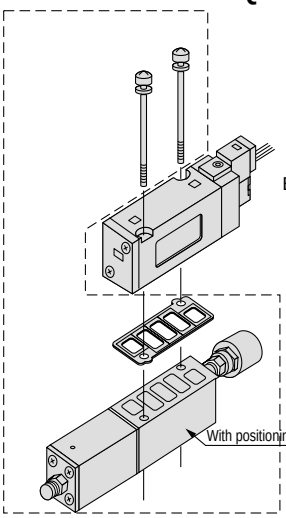

Applicable manifold base
SS5YJ7-40
SS5YJ7-41
SS5YJ7-42

Refer to p.1.3-7 prior to handling

20 Type Manifold: Top Ported/SS5YJ7-20-Station □ -Q

Grommet(G), (H)

Built-in One-touch fitting

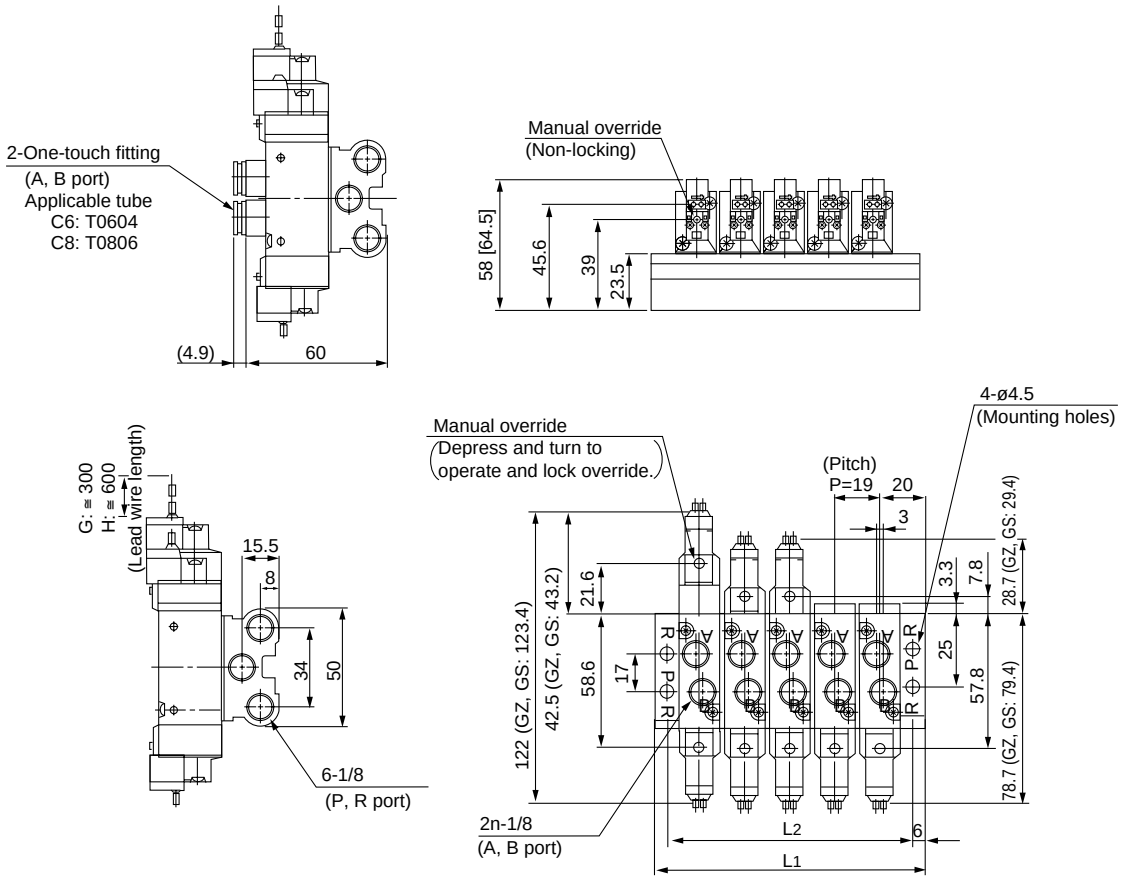

L plug connector (L)

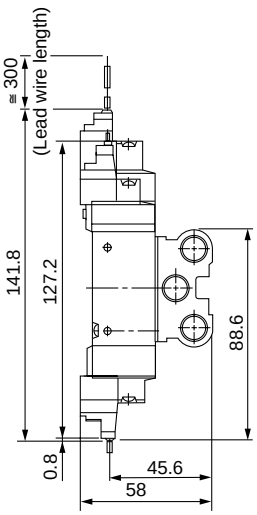

∗ Other dimensions are the same as the grommet style.

M plug connector (M)

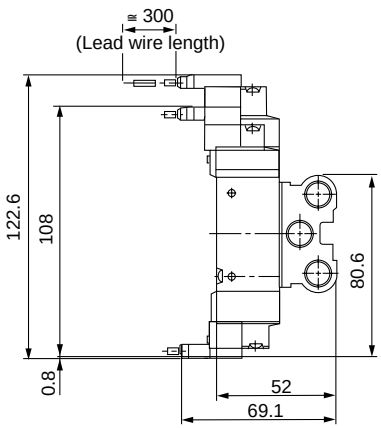

∗ Other dimensions are the same as the grommet style.

Stations	2	3	4	5	6	7	8	9	10	11	12	13	14	15
L_1	59	78	97	116	135	154	173	192	211	230	249	268	287	306
L_2	47	66	85	104	123	142	161	180	199	218	237	256	275	294

21 Type Manifold: Top Ported/SS5YJ7-21-Station □ -Q

Grommet(G), (H)

Built-in One-touch fitting

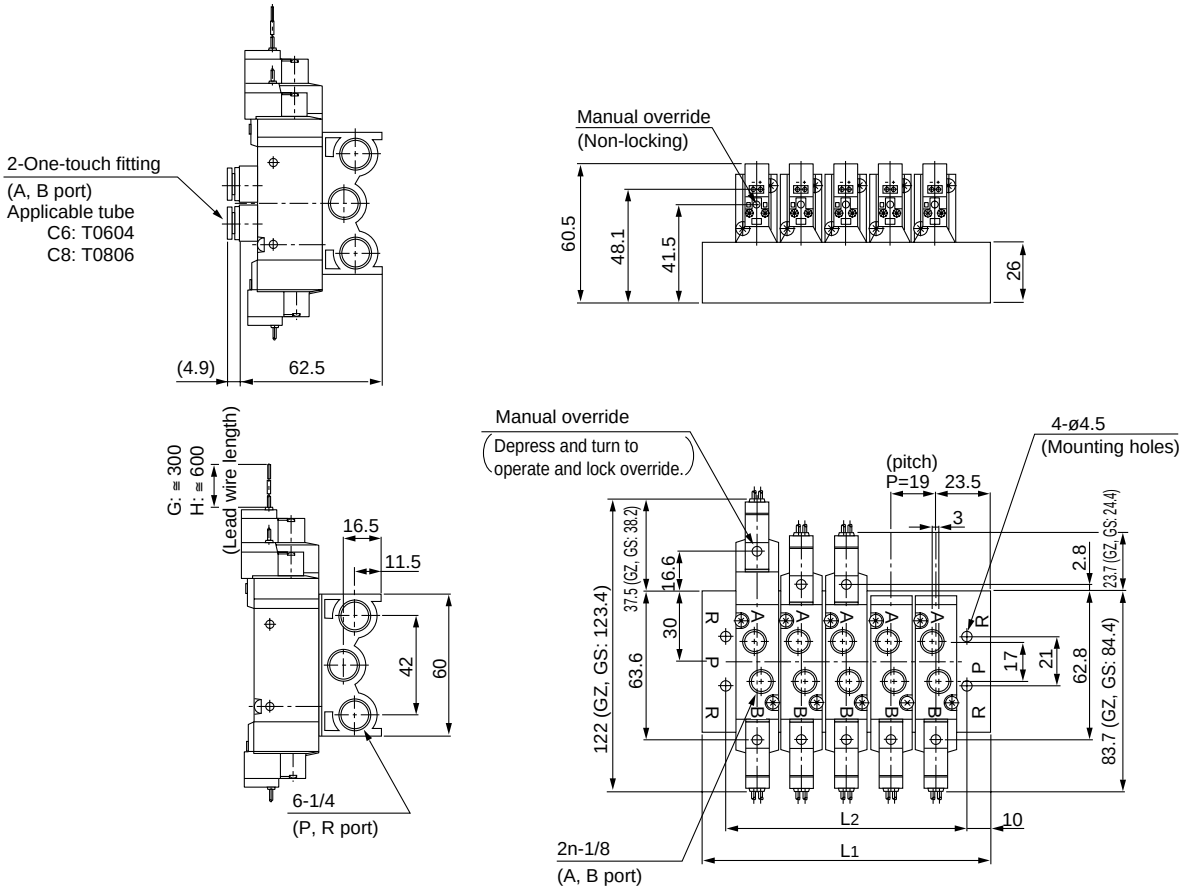

L plug connector (L)

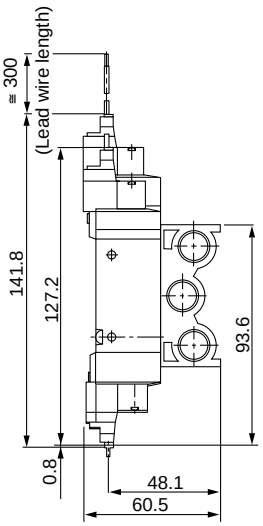

∗ Other dimensions are the same as the grommet style.

M plug connector (M)

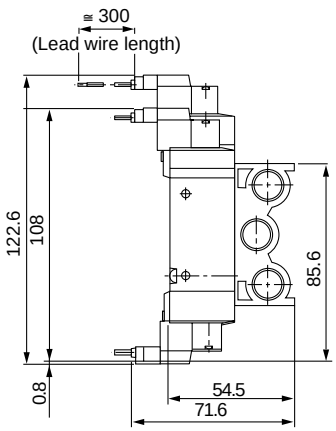

∗ Other dimensions are the same as the grommet style.

Station	2	3	4	5	6	7	8	9	10	11	12	13	14	15	16	17	18	19	20
L1	66	85	104	123	142	161	180	199	218	237	256	275	294	313	332	351	370	389	408
L2	46	65	84	103	122	141	160	179	198	217	236	255	274	293	312	331	350	369	388

40 Type Manifold: Bottom Ported/SS5YJ7-40-Station -01□ -Q

Grommet(G), (H)

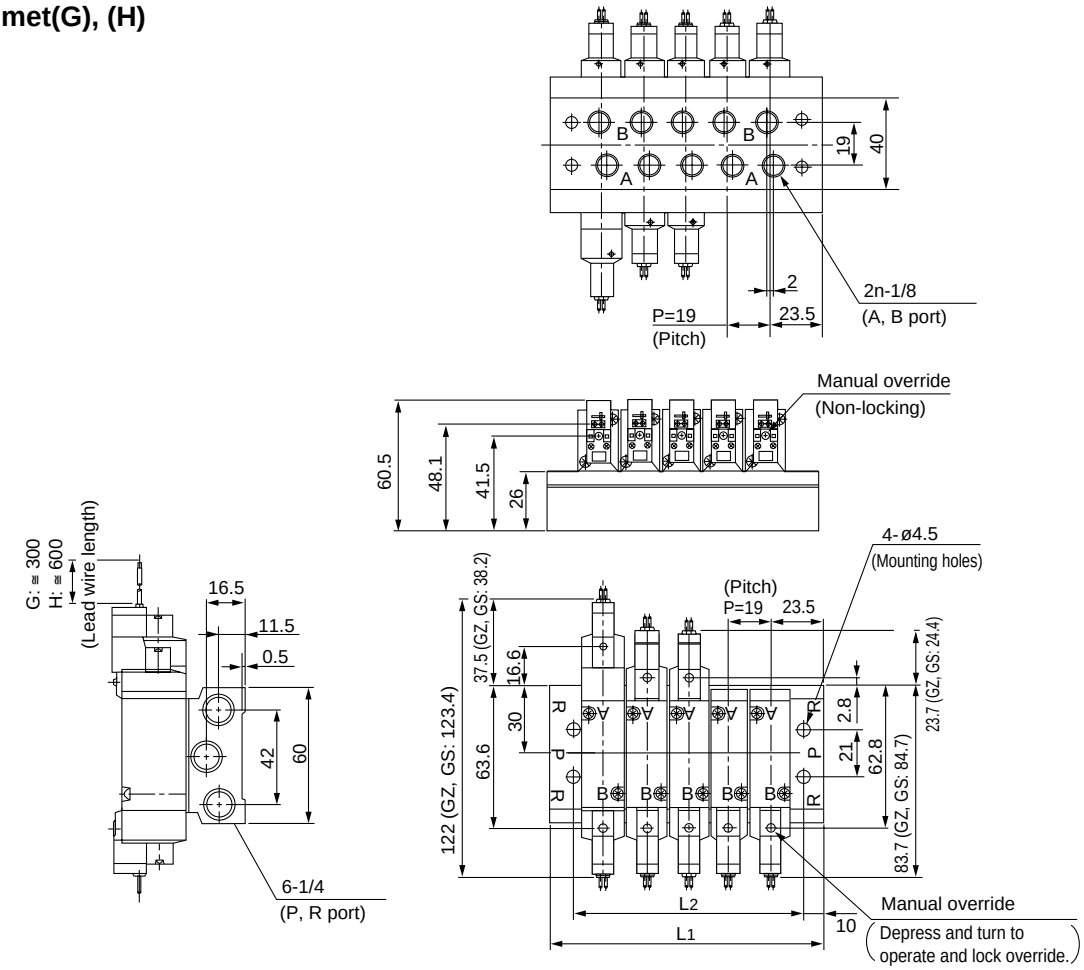

L plug connector (L)

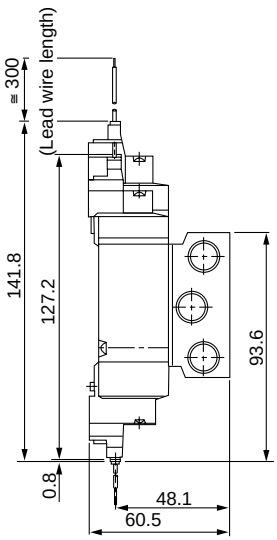

∗ Other dimensions are the same as the grommet style.

M plug connector (M)

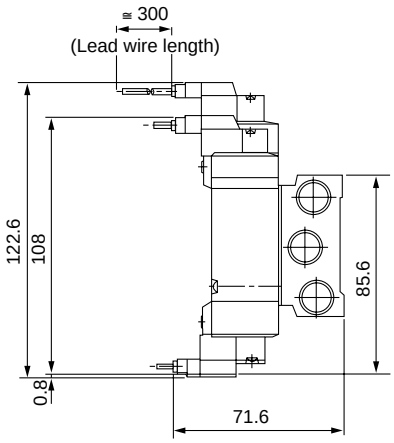

∗ Other dimensions are the same as the grommet style.

Station	2	3	4	5	6	7	8	9	10	11	12	13	14	15	16	17	18	19	20
L1	66	85	104	123	142	161	180	199	218	237	256	275	294	313	332	351	370	389	408
L2	46	65	84	103	122	141	160	179	198	217	236	255	274	293	312	331	350	369	388

41 Type Manifold: Side Ported/SS5YJ7-41-Station-01□ -Q

Grommet (G), (H)

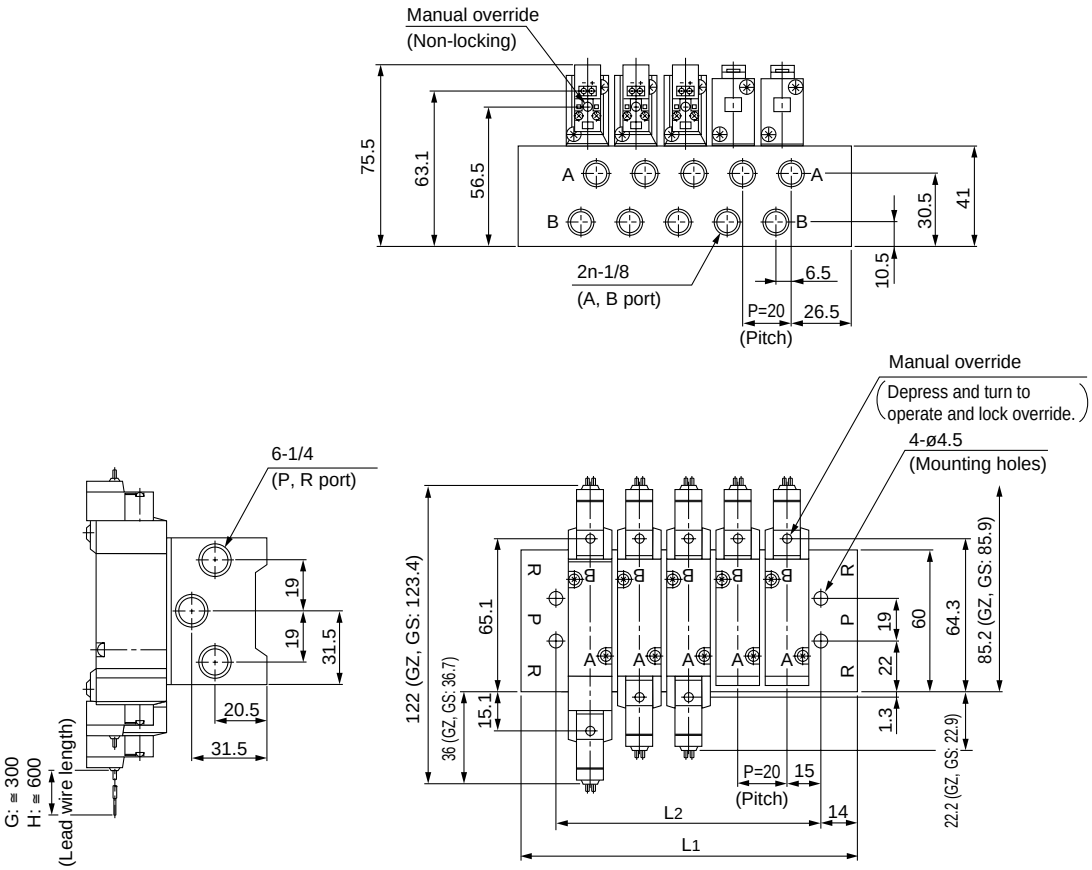

L plug connector (L)

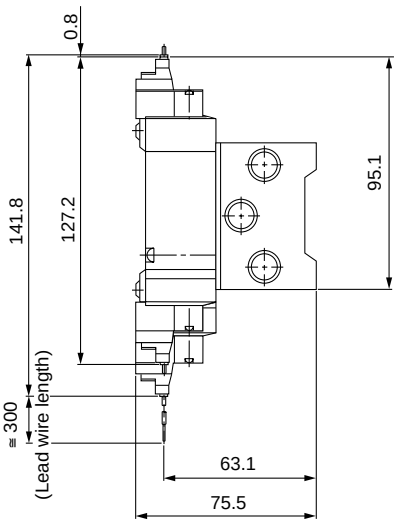

∗ Other dimensions are the same as the grommet style.

M plug connector (M)

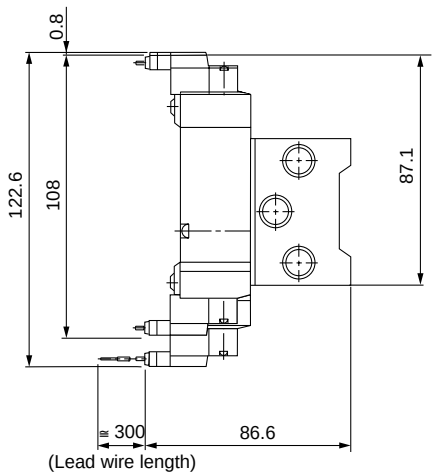

∗ Other dimensions are the same as the grommet style.

Station	2	3	4	5	6	7	8	9	10	11	12	13	14	15	16	17	18	19	20
L_1	78	98	118	138	158	178	198	218	238	258	278	298	318	338	358	378	398	418	438
L_2	50	70	90	110	130	150	170	190	210	230	250	270	290	310	330	350	370	390	410

42 Type Manifold: Side Ported/SS5YJ7-42-Station -C6, C8□ -Q

Grommet(G), (H)

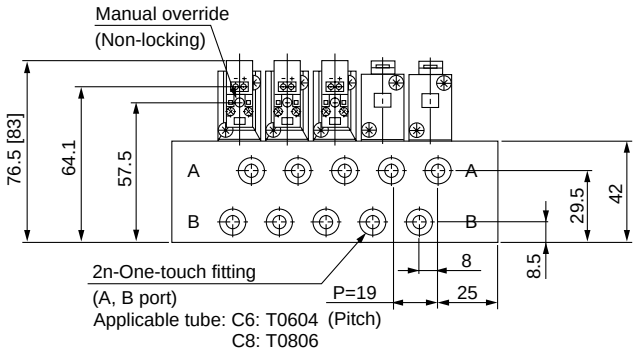

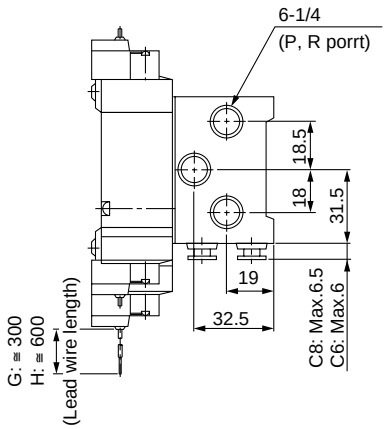

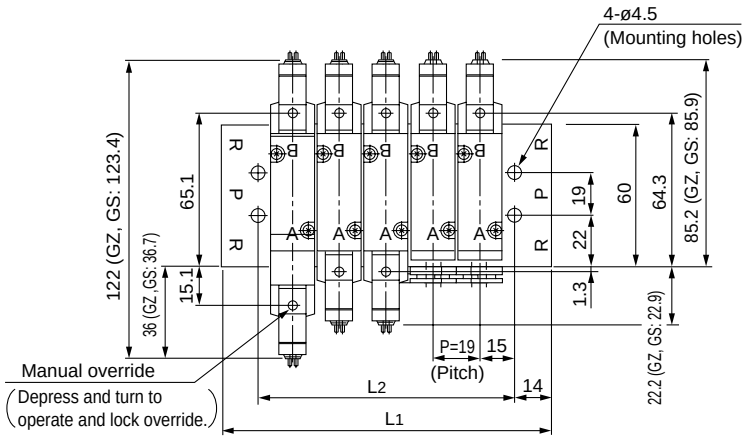

L plug connector (L)

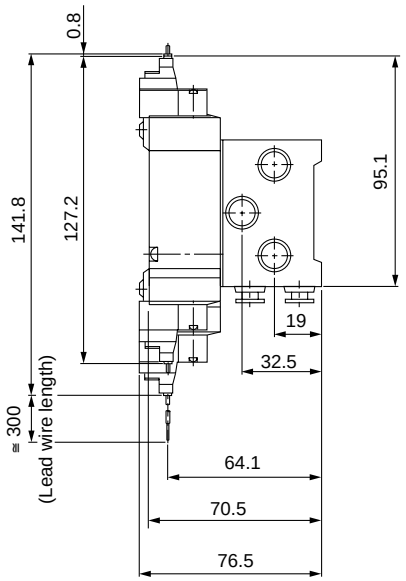

∗ Other dimensions are the same as the grommet style.

M plug connector (M)

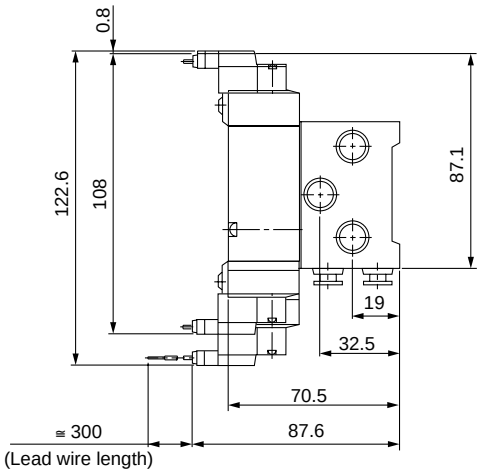

∗ Other dimensions are the same as the grommet style.

Station	2	3	4	5	6	7	8	9	10	11	12	13	14	15	16	17	18	19	20
L1	77	96	115	134	153	172	191	210	229	248	267	286	305	324	343	362	381	400	419
L2	49	68	87	106	125	144	163	182	201	220	239	258	277	296	315	334	353	372	391

Flat Cable Manifold

SS5YJ7-21P- Station □ -Q

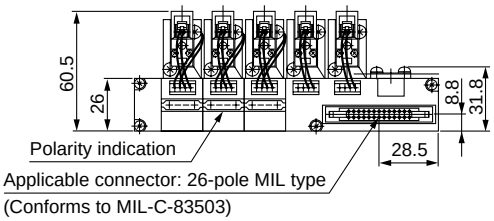

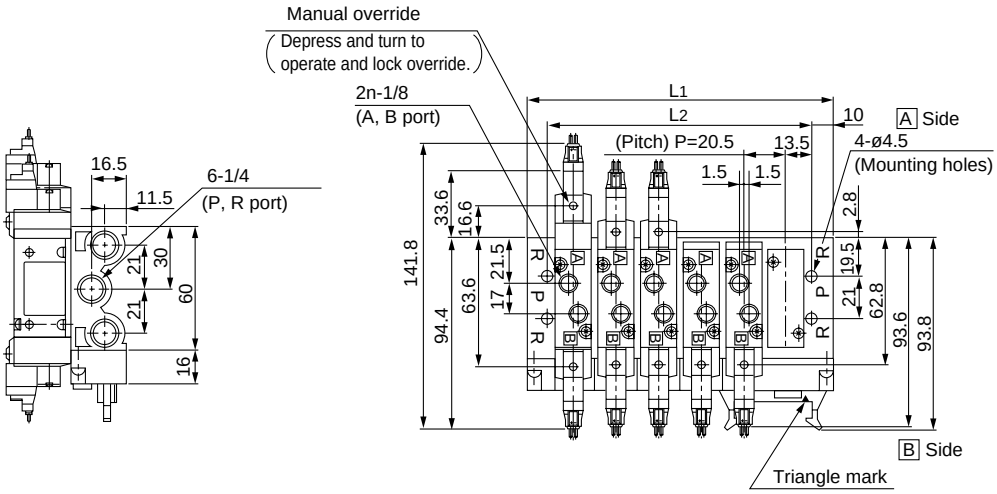

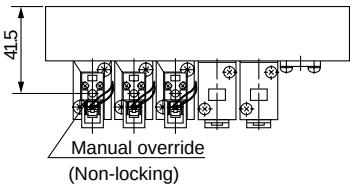

C6, C8(Built-in One-touch fittings)

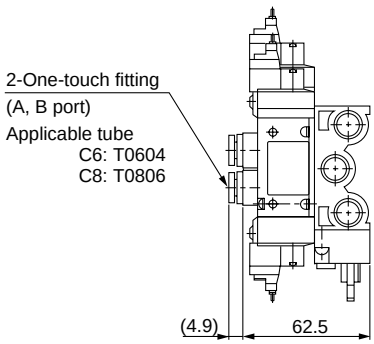

Station	3	4	5	6	7	8	9	10	11	12
L1	88	108.5	129	149.5	170	190.5	211	231.5	252	272.5
L2	68	88.5	109	129.5	150	170.5	191	211.5	232	252.5

Made to Order Specifications

Order Made

Power Saver

Power consumption is decreased by 1/3 by reducing the wattage required to hold the valve in an energized state.

Specifications

Series		SYJ 3000/5000/7000 T
Coil rated voltage (V)		12, 24DC
Power consumption (W)	Inrush	0.55
	Holding	0.22

Specifications other than above are the same as standard models.

Operating Principles

The circuit shown below reduces current consumption at holding which reduces the overall power consumption.
Refer to following power wave form.

Electrical circuit (For power saver)

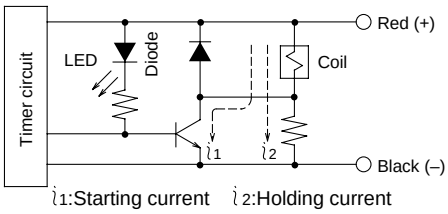

<Low Power consumption/Power wave style SYJ 3000/5000/7000 T>

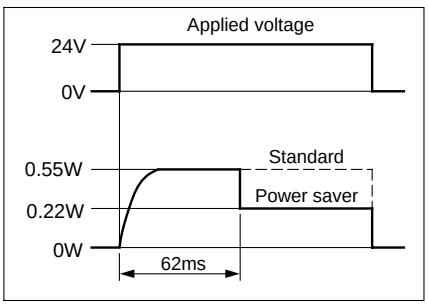

How to Order

SYJ 3/5/7 □□□ T– □□ Z □ – □ – □

- Rated voltage

5	24V DC
6	12V DC

- Specify the same as standard

External Pilot for Body Ported Style

Applicable solenoid valve series SYJ5□20, SYJ7□22

Model No. SYJ 5/7 □ 20 – □□□□ – □ – □ – X20

- Same as standard.

Operating pressure range MPa

Operating pressure range	–100kPa to 0.7
Pilot pressure range	0.15 to 0.7

External pilot port size

Series	Port size
SYJ5000, SYJ7000	M5

Dimensions

SYJ5000: Overall length 8mm longer

SYJ7000: Overall length 8mm longer
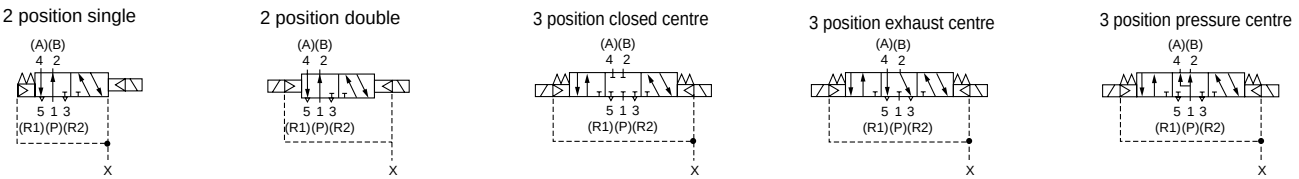
Body ported
JIS symbol